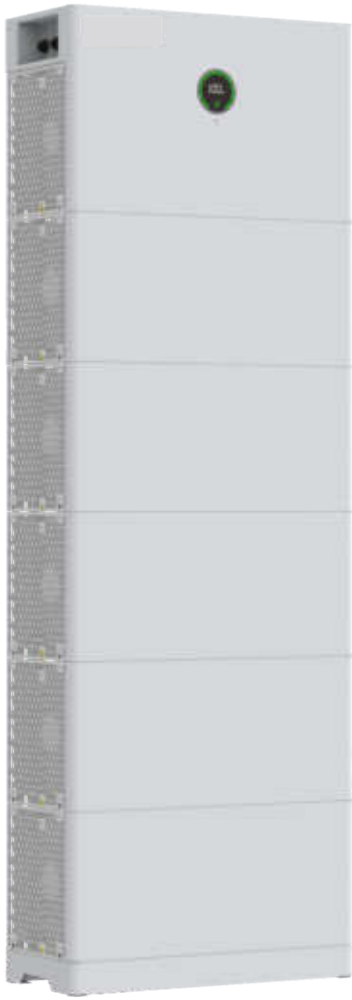

APX 5.0-30.0M-S3 High Voltage Battery System

User Manual

About This Document

This document introduces the APX 5.0-30.0M-S3 High Voltage Battery System (short for APX M-S3) in terms of installation, electrical connection, operation, commissioning, maintenance, and troubleshooting. Before installing and operating the APX M-S3 system, ensure that you are familiar with product features, functions, and safety precautions provided in this document.

Symbol	Description
WARNING	Indicates a potentially hazardous situation, if not avoided, could result in serious injury or death.

Table of Contents

1 Product Overview 1

1.1 Intended Use 1

1.2 Appearance 1

1.2.1 APX 5.0M-B3 (Master Module) 1

1.2.2 APX 5.0P-B3 (Battery Module) 4

1.3 Working Principle and Function 5

2 Safety 6

2.1 General Safety 6

2.2 Safety Precautions 6

2.2.1 Environment Requirements 6

2.2.2 Operation Precautions 7

2.3 Label Description 7

2.4 Emergency Responses 10

3 Storage and Transportation 11

3.1 Storage Requirements 11

3.2 Transportation Requirements 12

4 Installation 13

4.1 Basic Installation Requirements 13

4.2 Installation Tools 16

4.3 Installation Procedures 17

4.3.1 Pre-installation Check 17

4.3.2 Floor-mounted Installation 21

4.3.3 Wall-mounted Installation 26

4.4 Electrical Connection 29

4.4.1 Communication Cable Connection 30

4.4.2 System Connection 31

5 Power on/off the APX M-S3 System 35

5.1 Power on the APX M-S3 System 35

5.2 Power off the APX M-S3 System 37

6 Maintenance Guide 38

6.1 Preparation 38

6.2 Battery Module or Master Module Replacement 38

6.3 LED Indicators 39

6.4 Troubleshooting 40

6.5 Cleaning 53

7 Technical Specifications 54

7.1 APX 5.0M-B3 (Master Module) 54

7.2 APX 5.0P-B3 (Battery Module) 55

1 Product Overview

1.1 Intended Use

The APX 5.0-30.0M-S3 High Voltage Battery System (hereinafter referred to as APX M-S3) consists of one APX 5.0M-B3 (hereinafter referred to as Master Module) and zero to five APX 5.0P-B3 (hereinafter referred to as Battery Module).
Each Battery Module consists of 314Ah lithium-ion battery cells and a DC-DC converter, which boosts a power source of 16V up to 400V/750V(determined by the matched inverter). Up to five Battery Modules can be connected in parallel to increase the capacity and power of the energy storage system.
The APX M-S3 system is compatible with single-phase inverters (MIN-XH/XH2 series) and three-phase inverters (MOD, MID series), supporting power supply to loads during grid outages or nighttime. When solar power is available, it prioritizes supplying the loads, with any surplus energy charging the battery.
Early installed MIN-XH and MOD-XH（BP） units may have restricted functionality when integrated with the APX M-S3 system. For more information, please consult ’s customer service department.
The APX M-S3 system is recommended to be used with the ShineWilan-X2 communication collector.

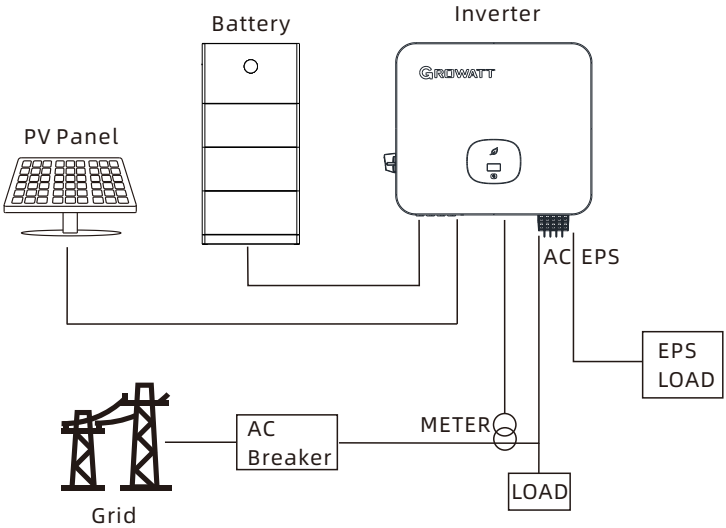

Figure 1.1 System diagram of APX 5.0-30.0M-S3 High Voltage Battery System

1.2 Appearance

1.2.1 APX 5.0M-B3（Master Module）

The Master Module consists of lithium-ion batttery cells, a DC-DC converter, a battery management unit (BMU), a power control unit, and key electrical components such as relays, fuses, and DC switch. Power and communication terminals are also integrated. The product appearance is shown in the figure below:

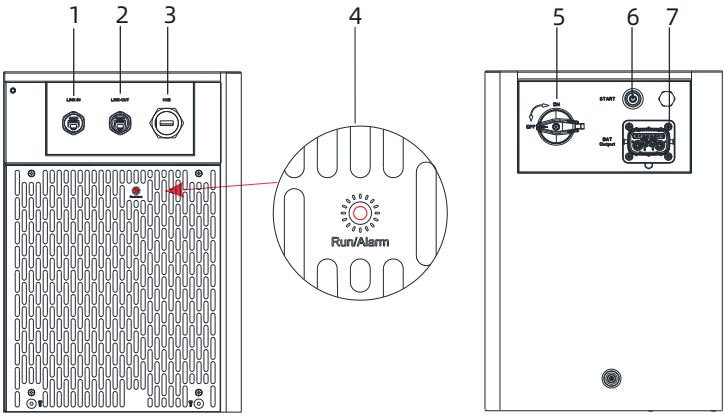

Figure 1.2 Schematic diagram of APX 5.0M-B3

Table 1.1 APX 5.0M-B3 panel description

NO.	Port	Function
1	Link-in	APX M-S3 cascading communication input port
2	Link-out	APX M-S3 cascading communication output port
3	USB	USB port for inserting a USB flash drive to update the firmware
4	LED	LED status indicator: ➢ Steady green:Normal ➢ Blinking green: Upgrade ➢ Steady red:Fault ➢ Permanent darkness: Hibernation
5	DC switch	Turn on/off the power connection from Master Module to inverter
6	Start button	Wake up the Battery Module (Press and hold for over 5 seconds)
7	Power and communication integrated terminal	Power and communication interfaces connected to the inverter（Connect the system cable after removing the cover）.

LED display:

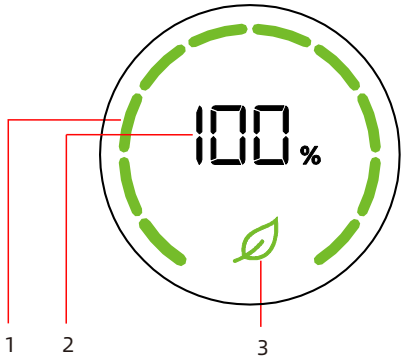

Figure 1-3 LED display

Table 1.2 LED display description

No.	Function	Function description
1	Display SOC	Display current SOC in a progress circle
	Display upgrade status	When upgrading the firmware, light bars will light up in clockwise, indicating the progress of the upgrade
	Charging	When charging, light bars step up in clockwise
	Discharging	When discharging, light bars step down in anti-clockwise
2	Display SOC	Display SOC in percentage
	Display upgrade status	When upgrading the firmware, “UP” is displayed
3	APX M-S3 system status indicator	Steady green: Normal Blinking green: Protcet or standby status Steady red: Fault

Dimensions(unit: mm)

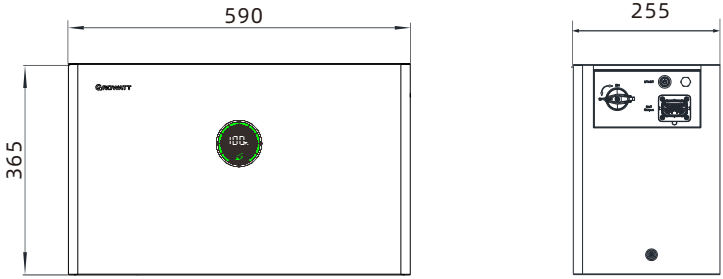

Figure 1.4 Dimension of APX 5.0M-B3

1.2.2 APX 5.0P-B3 (Battery Module)

The Battery Module consists of lithium-ion battery cells, a DC-DC converter, a Battery Management Unit (BMU) and mechanical components. Power and communication terminals are also integrated. The product appearance is shown in the figure.

Dimensions(unit: mm)

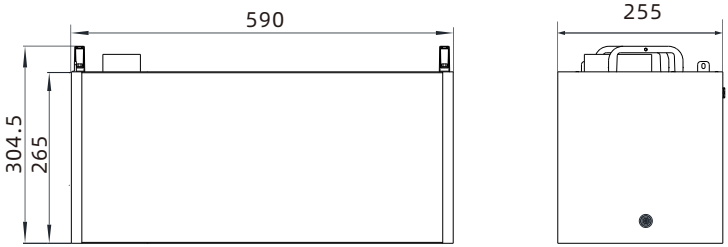

Figure 1.5 Demsion of APX 5.0P-B3

Battery Module LED indicator description:

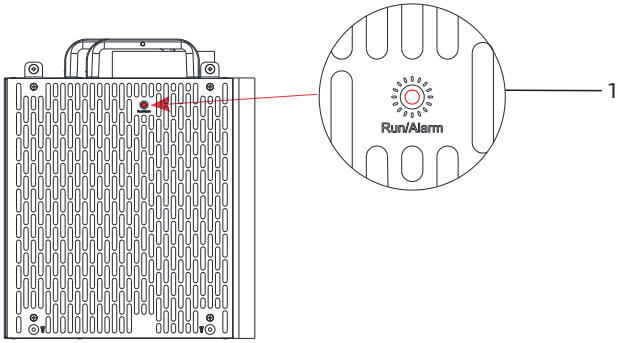

Figure 1.6 Battery Module LED indicator

Table 1.3 APX 5.0P-B3 LED indicator description

No.	Function	Function description
1	APX 5.0P-B3 status indicator	LED status indicator: ➢ Steady green: Normal ➢ Blinking green: Upgrade ➢ Steady red: Fault ➢ Permanent darkness: Hibernation

1.3 Working Principle and Function

The APX M-S3 system is composed of a Master Module APX 5.0M-B3 and multiple Battery Modules APX 5.0P-B3 connected in parallel. It contains lithium-ion battery, battery control units, power control units, battery management units, power and communication terminals, and mechanical parts.

The APX M-S3 system distinguishes itself with better charging and discharging performance, higher charging and discharging efficiency, higher flexibility in capacity expansion, more accurate status monitoring, longer service life, and less self-discharge loss.

A single APX M-S3 system can connect 0 to 5 Battery Modules parallel to increase the capacity and power of the battery system, and it communicates with the inverter through RS485/CAN communications. At the same time, it supports the cascading of up to 3 APX M-S3 systems. One APX M-S3 system communicates with another APX M-S3 system through CAN communication. Its operational stability is particularly outstanding.

- Monitoring: Monitor the voltage, current and temperature of each module and the battery system.
- Protection and alarm: Generate alarms and provide protection in cases of over-voltage, under-voltage, over-current, over-temperature or under-temperature.
- Report: Report alarms and status data to the inverter.
- Parallel connection: Supports 0 to 5 Battery Modules connected in parallel with the Master Module.
- Cascading connection: Support the cascading of up to 3 APX M-S3 systems.
- Battery cell balancing: Passive battery balancing.
- Battery Module balancing: Intelligent power distribution, active balancing.
- System power-off: 12 minutes after the battery system and inverter communication is disconnected.

Safety 2

When installing or using the battery system, observe the safety precautions provided in this section. For personal safety, the operational personnel must read through this manual and follow the safety instructions.

2.1 General Safety

The battery system has been designed and tested in accordance with strict rules to meet international safety certification requirements. Before installing or using the battery system, please read all safety instructions carefully and follow the rules. will not be responsible for any of the following circumstances or their consequences:

- Damage during the transportation by the customer.
- Damage caused by improper operations in transportation, storage, installation and use, or the third party fails to convey the correct information about transportation, storage, installation and use to end users.
- Improper installation by unprofessional and unreliable personnel.
- Failure to follow the operation instructions and safety precautions in this document.
- Unauthorized modifications or removal of the software package.
- The product's tamper evident label is removed or any item missing due to customer's negligence or intentional damage.
- Operation in environments that cannot meet the requirements specified in this document.
- Damage caused by repairing, disassembling, and modifying batteries without authorization.
- Damage to labels on the chassis or modification on the date of production.
- Battery packs fail to be charged for more than six months.
- Damage due to force majeure, such as lightning, earthquakes, fire, and storms.
- Warranty expiration.ad the instructions carefully and follow all safety precautions at all time.

2.2 Safety Precautions

2.2.1 Environment Requirements

- Do not expose the battery in environments above 55℃ or near heat sources.
- Do not expose the battery to moisture, corrosive gases or liquids, such as in the bathroom.
- Do not expose the battery to direct sunlight for extended periods of time.
- Place the battery in a safe place and ensure that the battery is not accessible to children (Non-children's play area) and animals.
- Battery power terminals shall not come in contact with conductive objects such as wires.
- Do not expose the battery in fire, which may cause an explosion.
- The battery system must be kept away from liquids.

2.2.2 Operation Precautions

- Do not touch the battery system with wet hands.
- Do not disassemble the battery system without authorization.
- Do not crush, drop or pierce the battery pack and the high voltage controller.
- Dispose of the batteries according to local safety regulations.
- Store and recharge the battery in accordance with this manual.
- Ensure that the PE cable is securely connected.
- Remove all metal objects such as watches and rings that could cause a short circuit before installation, replacement and maintenance.
- The APX M-S3 system shall be repaired, replaced or maintained by qualified and well trained personnel.
- When storing or handling the batteries, do not stack batteries without package.
- Handle the battery with caution to avoid leakage. The leaked electrolyte is toxic and hazardous to skin and eyes.
- Stack battery packing cases in compliance with the stacking requirements on the external package.
- Do not use damaged, faulty or deformed batteries, which may release flammable gases that may cause a fire or other safety hazards.
- Do not touch the machine while it is running to avoid burns.

2.3 Label Description

Symbols	Description
	Do not dispose of the system with the household waste but in accordance with the local regulations
	Lithium-Ion batteries can be recycled
	The system complies with the requirements of the applicable EU directives
	Risk of high voltages which might lead to electric shocks
	Delayed discharge: High voltage exists after the battery is powered off, and it takes 5 minutes to discharge to the safe voltage
	Be aware of the explosive gas
	Be aware of the battery leak

Symbols	Description
	Heavy objects, lift with care
	Caution: Hot Surface
	Keep the battery system away from children
	Ensure that the positive and negative terminals are correctly connected
	Keep away from open flame or ignition sources
	Observe the manual.

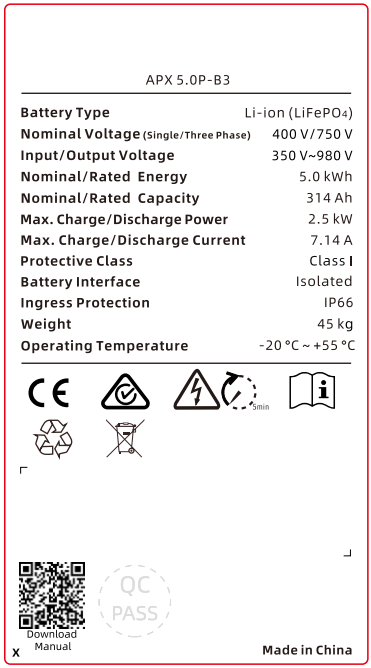

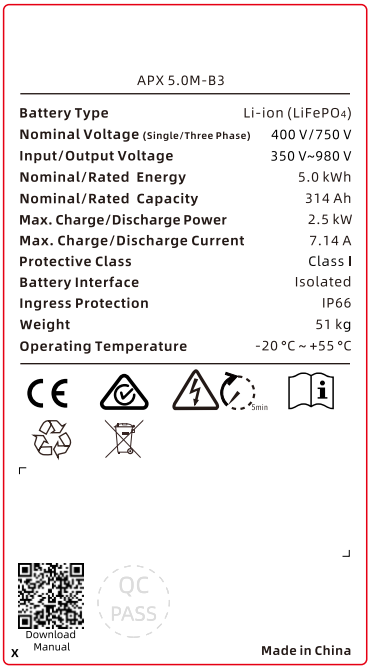

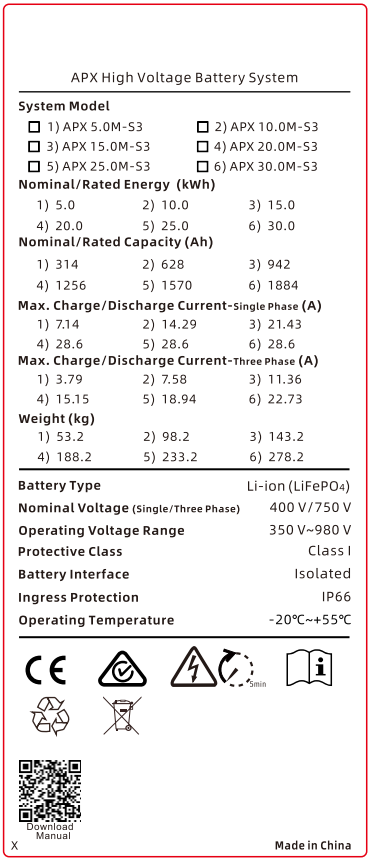

APX High Voltage Battery System

System Model

- ☐ 1) APX 5.0M-S3
- ☐ 2) APX 10.0M-S3
- ☐ 3) APX 15.0M-S3
- ☐ 4) APX 20.0M-S3
- ☐ 5) APX 25.0M-S3
- ☐ 6) APX 30.0M-S3

Nominal/Rated Energy (kWh)

1) 5.0	2) 10.0	3) 15.0
4) 20.0	5) 25.0	6) 30.0

Nominal/Rated Capacity (Ah)

1) 314	2) 628	3) 942
4) 1256	5) 1570	6) 1884

Max. Charge/Discharge Current-Single Phase (A)

1) 7.14	2) 14.29	3) 21.43
4) 28.6	5) 28.6	6) 28.6

Max. Charge/Discharge Current-Three Phase (A)

1) 3.79	2) 7.58	3) 11.36
4) 15.15	5) 18.94	6) 22.73

Weight (kg)

1) 53.2	2) 98.2	3) 143.2
4) 188.2	5) 233.2	6) 278.2

Battery Type	Li-ion ($LiFePO_4$)
Nominal Voltage (Single/Three Phase)	400 V/750 V
Operating Voltage Range	350 V~980 V
Protective Class	Class I
Battery Interface	Isolated
Ingress Protection	IP66
Operating Temperature	-20℃~+55℃

Figure 2-1: Nameplate

Figure 2-2: Label

WARNING	Performance derating may be initiated when the temperature is below 10°C or above 45°C.

2.4 Emergency Responses

Manufacturer has taken foreseeable risk scenarios into consideration with the aim of reducing hazards and dangers. In case of an emergency, do as below:

Table 2. 1 Emergency responses

Emergency	Description and measures
Leakage emergency	Avoid contact with leaked liquids or gases. Should you come into direct contact with the battery electrolyte, do as follows: Inhalation: Evacuate from the contaminated area, and seek immediate medical attention. Eye contact: Flush your eyes with flowing water for 15 minutes, and seek immediate medical attention. Skin contact: Wash the affected area with soap and water, and seek immediate medical attention. Ingestion: seek immediate medical attention.
Fire emergency	Normally, the battery system won't ignite spontaneously. If a fire occurs, do not try to extinguish the fire but evacuate people immediately.
Flood emergency	If the battery system is soaked or submerged in water, do not touch the batteries to avoid electric shock. Contact or your distributor immediately for technical assistance.
Shell damage	The shell damage requires extra attention as it is of high risk.Do not use batteries with a damaged shell, which may cause safety hazards. Contact or a distributor to dispose of them.

3 Storage and Transportation

3.1 Storage Requirements

- ➢ Place the batteries according to the marking on the packing case.
- ➢ Do not put batteries upside down or sidelong.
- ➢ Do not store damaged batteries near undamaged ones.
- ➢ The storage environment requirements are as follows:
- • Install the batteries in a dry, clean and well-ventilated place.
- • The battery is recommended to be stored in an environment within the temperature range of -20°C~30°C and charged regularly.

Table 3.1 Storage conditions and storage duration

Storage temperature	Storage RH	Storage period	Recharge period
<-20℃	/	Not permitted	/
-20℃~10℃	5%~95%	≤12 months	≤12 months
10℃~30℃	5%~95%	≤9 months	≤9 months
30℃~50℃	5%~95%	≤6 months	≤6 months
> 50℃	/	Not permitted	/

Note:
If the battery is not charged when the permitted storage period illustrated above is exceeded, it might result in battery damage. Currently, the battery can only be charged via the inverter.

- ➢ Do not expose batteries to corrosive environments.
- ➢ Avoid direct exposure to sunlight and rain.
- ➢ Keep the batteries at least two meters away from heat sources (such as a radiator).
- ➢ Avoid exposure to intense infrared radiation.
- ➢ If the battery is discharged below 10% SOC, please charge it to 40% SOC within 7 days.

NOTICE	Failure to follow the above instructions for long-term storage may reduce the battery's cycle life or even damage it.

3.2 Transportation Requirements

The battery pack passes the certifications of the UN38.3 (Secttion 38.3 of the sixth Revised Edition of the Recommendations on the Transport of Dangerous Goods: Manual of Tests and Criteria) and SN/T 0370.2-2009 (Part2: Performance Test of the Rules for the Inspection of Packaging for Exporting Dangerous Goods). The battery pack belongs to Class 9 dangerous goods.

- The battery pack shall not be transported with other inflammable, explosive or toxic materials.
- Ensure that the original package and label are intact and identifiable.
- Avoid direct exposure to sunlight, rain, condensing water caused by temperature difference and mechanical damages.
- There will be a drop in capacity during transportation and storage.
- Transportation temperature is between-20°C to 40°C, relative humidity: 5%~95%RH.

4 Installation

WARNING	➢ Read through the Guidance before installation to understand product information and safety precautions. ➢ Only qualified and well-trained technicians who fully understand the whole photovoltaic system, grid network, battery system, working principle and national/local standards are allowed to perform operations on the battery. ➢ Installers must use insulating tools and wear safety equipment. ➢ Device damages caused by failure to comply with storage, transportation, installation and use requirements specified in Guidance are not covered under the warranty. ➢ Do not install or use the battery near explosive or inflammable materials. ➢ Use the battery in a well-ventilated environment with temperature ranging from -20℃ to 55°C. For outdoor installation, build a sun & rain shade to avoid direct exposure to sunlight and rain. ➢ The batteries should be protected from dust and dirt. Do not expose batteries to high humidity. ➢ Customers can select either floor-mounted or wall-mounted installation, with the floor-mounted also supporting dual-cluster parallel installation. ➢ The battery should be installed below the inverter or at the air intake. Installation at the inverter's air outlet is prohibited to prevent battery derating. ➢ The number of battery installations must comply with local regulations.

4.1 Basic Installation Requirements

➢ The ambient temperature for battery system installation should be above -20°C and below 55°C, with a recommended operating temperature range of 10°C to 30°C. Humidity should be between 5% and 95%.

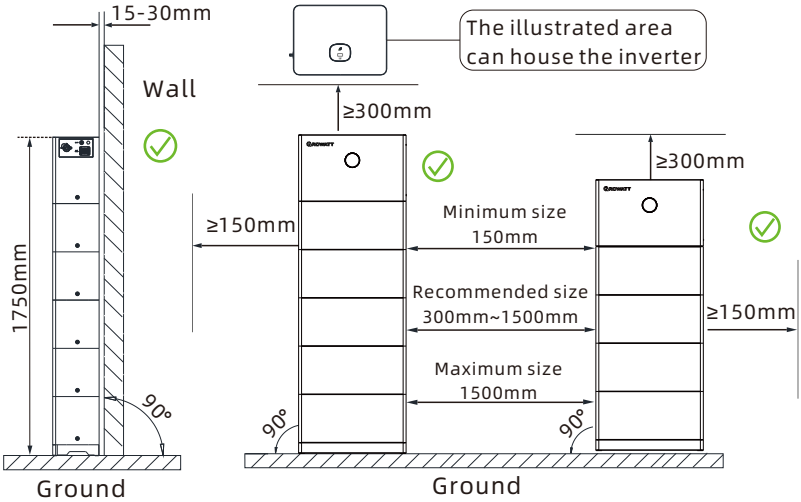

Figure 4.1 Floor-mounted installation location requirements

Note: For the floor-mounted installation, a single column can be configured with up to six modules (1 Master Module + 5 Battery Modules).

➢ The APX M-S3 system supports dual-cluster parallel installation, with the following installation location requirements:

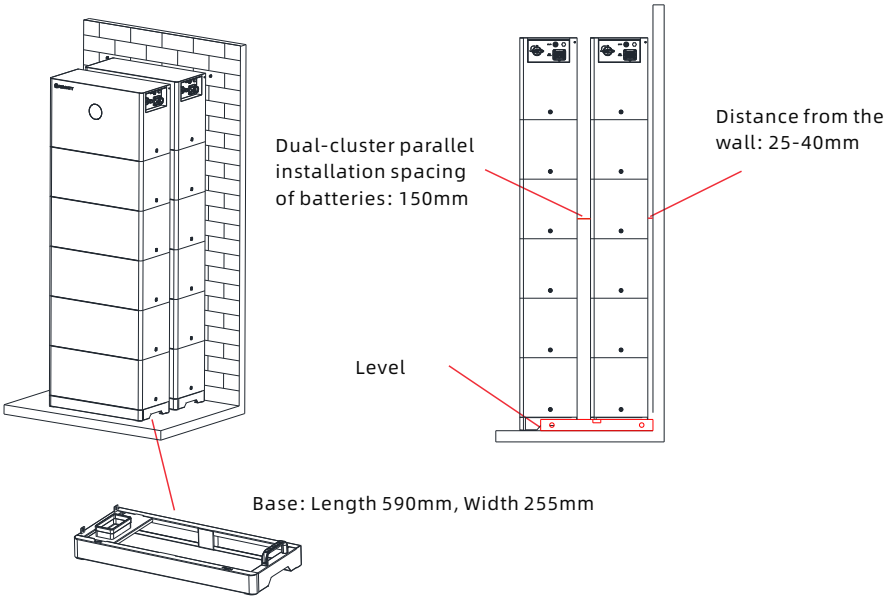

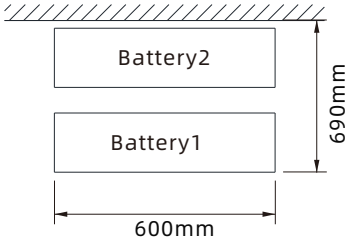

The maximum placement dimensions of the dual-cluster battery system are as shown in the figure: Length: 600mm, Width: 690mm

Figure 4.2 Dual-cluster parallel installation location requirements

Note:

When installing the two bases, they must be kept level, and the two cluster of batteries need to be aligned front to back.

When using the dual-cluster parallel installation, the number of the two battery clusters must be identical.

- The battery system can be installed indoors or outdoors. The angle and space requirements are as follows:

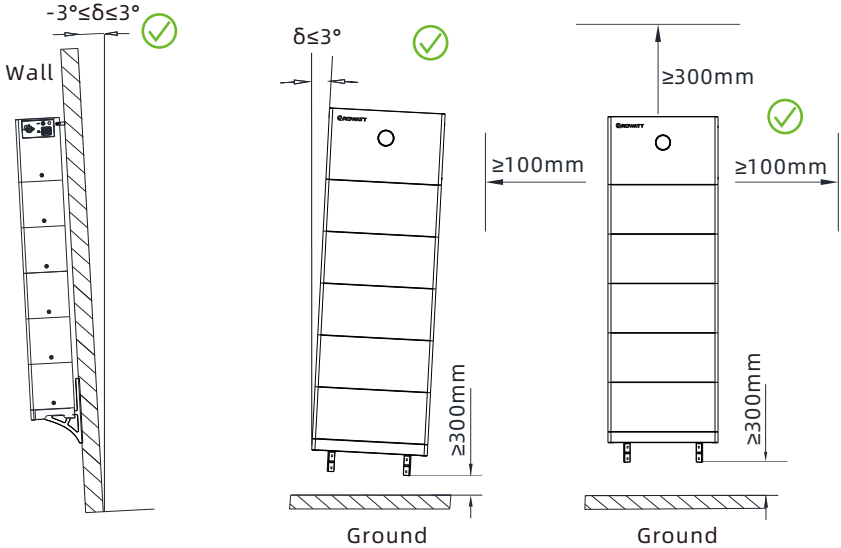

Figure 4.3 Wall-mounted installation location requirements

Note:

- For wall-mounted installations, a single column can be configured with up to six modules (1 Master Module + 5 Battery Modules).
- Ensure the wall's load-bearing capacity exceeds the total system weight (each Master Module weighs 51 kg, each Battery Module weighs 45 kg).

WARNING	Do not place the battery upside down.

➢ When installed outdoors, build a sun/rain shelter to protect the battery system from direct sunlight and rain.

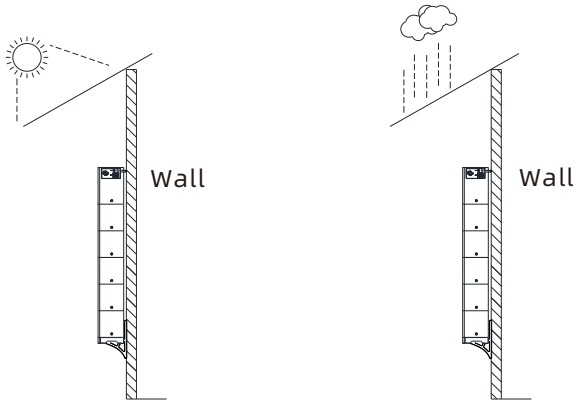

Figure 4.4 Build a sun/rain shelter

4.2 Installation Tools

Prepare the following tools to install the battery system:

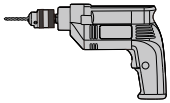 M6 Drill	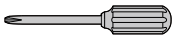 M4-1N·m Phillips Screw Driver	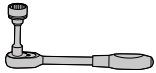 M6-2N·m Socket Wrench	Marker
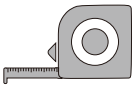 Tap Measure	Multimeter	Level	M3-1N·m Flat-head Screw Driver

Figure 4.5 Installation tools

It is recommended to wear the personal protective equipment when operating the battery system.

Safety gloves	Goggles	Safety shoes

Figure 4.6 Personal Protective Equipment

4.3 Installation Procedures

4.3.1 Pre-installation Check

- Check the package before unpack it. If any damage is found, do not unpack the package and contact your distributor..
- Check the quantity of all components according to the package list. If any damage is found or any component is missing, please contact your distributor.

4.3.1.1 Check the APX M-S3 System of Different Capacities

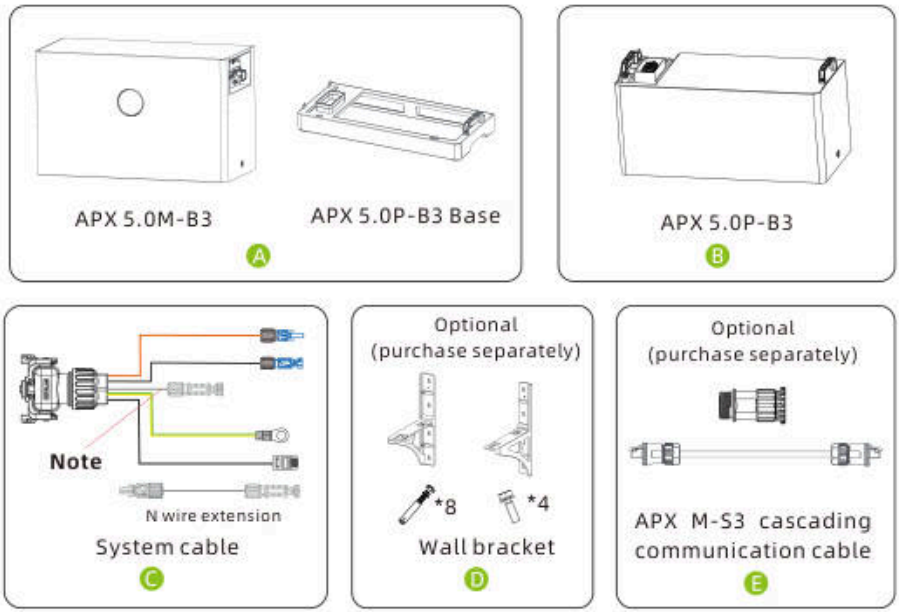

Note: In the old version, the N wire was blue and two meters long; in the new version, the N wire is gray and comes with an extension cord.

Figure 4.7 Components of the APX M-S3 system of different capacities

Table 4. 1 Number of components in APX M-S3 systems of different capacities

Battery System Capacity	Floor-mounted Installation Compound Mode	Wall-Mounted Installation Compound Mode
5kWh	A+C	A+C+D
10kWh	A+B+C	A+B+C+D
15kWh	A+B*2+C	A+B*2+C+D
20kWh	A+B*3+C	A+B*3+C+D
25kWh	A+B*4+C	A+B*4+C+D
30kWh	A+B*5+C	A+B*5+C+D
40kWh	A*2+B*6+C*2+E	A*2+B*6+C*2+D*2+E
50kWh	A*2+B*8+C*2+E	A*2+B*8+C*2+D*2+E
60kWh	A*2+B*10+C*2+E	A*2+B*10+C*2+D*2+E
70kWh	A*3+B*11+C*3+E*2	A*3+B*11+C*3+D*3+E*2
80kWh	A*3+B*13+C*3+E*2	A*3+B*13+C*3+D*3+E*2
90kWh	A*3+B*15+C*3+E*2	A*3+B*15+C*3+D*3+E*2

4.3.1.2 Check the Components of the APX 5.0M-B3

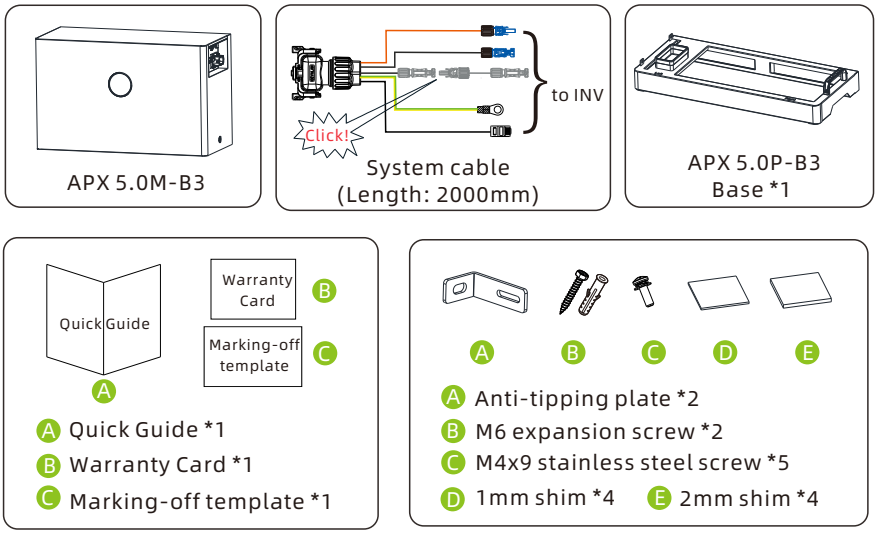

Figure 4.8 Components of the APX 5.0M-B3

Note:

Before shipment, the Master Module and base are pre-installed together. If customers require additional Battery Module, the base must first be removed. Follow these steps:

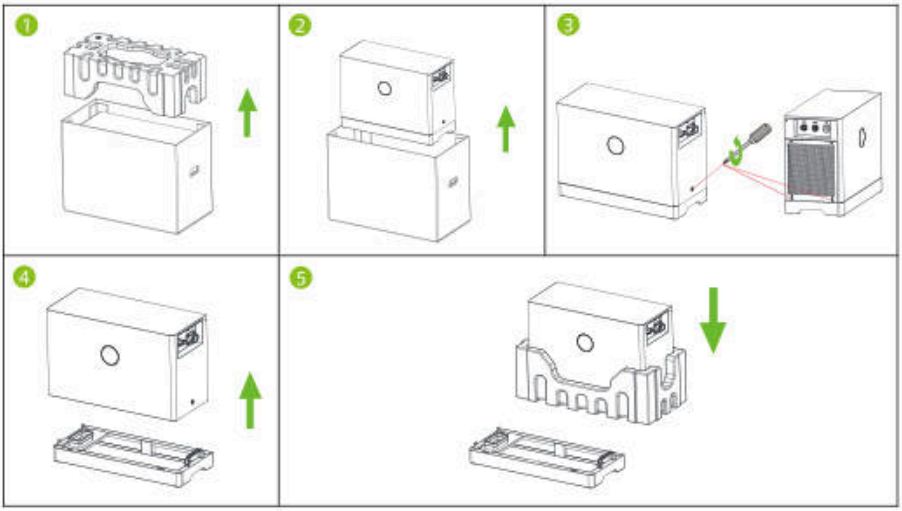

1. Remove the top buffer cotton.
2. Take out the Master Module + base.
3. Remove the screws (3PCS) between the Master Module and the base.
4. Lift the Master Module upward to separate the base from the Master Module.
5. Place the top buffer cotton upside down and put the Master Module on it.

Figure 4.9 Disassemble the Master Module from the base

WARNING	➢ To prevent damage to the parallel terminal at the bottom of the Master Module, after removing the base, do not place the Master Module directly on the ground.

4.3.1.3 Check the Components of the APX 5.0P-B3

Figure 4.10 Components of the APX 5.0P-B3

WARNING	➢ The APX M-S3 system consists of a Master Module (APX 5.0M-B3) and 0 to 5 Battery Modules (APX 5.0P-B3. To build a system exceeding 30kWh capacity, you need to cascade 2/3 APX M-S3 systems. ➢ The support base or the mounting bracket is optional based on the installation method. ➢ You need to separately purchase the cascading communication cables if you need to cascade 2/3 APX M-S3 systems. ➢ To prevent damage to the parallel terminal at the bottom of the Battery Module, do not place the Battery Module directly on the ground.

4.3.1.4 Check the Components of the Dual-cluster Parallel Installation

If the customer selects the dual-cluster parallel installation, the following components need to be prepared in advance:

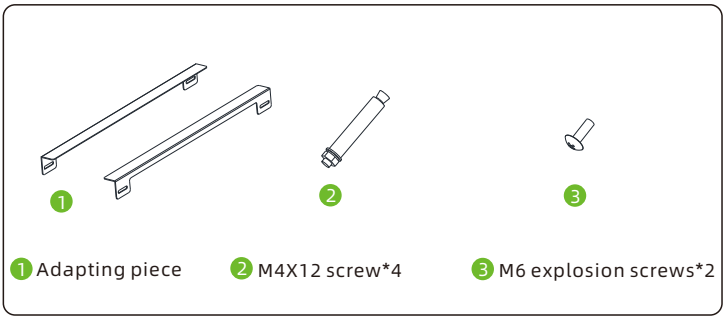

Figure 4.11 Components of the dual-cluster parallel installation

Note:
Among the above components, the M6 expansion bolts and M4 screws can be found in the Master Module accessory bag. Adapting piece must be purchased separately.

4.3.2 Floor-mounted Installation

4.3.3.1 Single-cluster Installation

Unit:mm

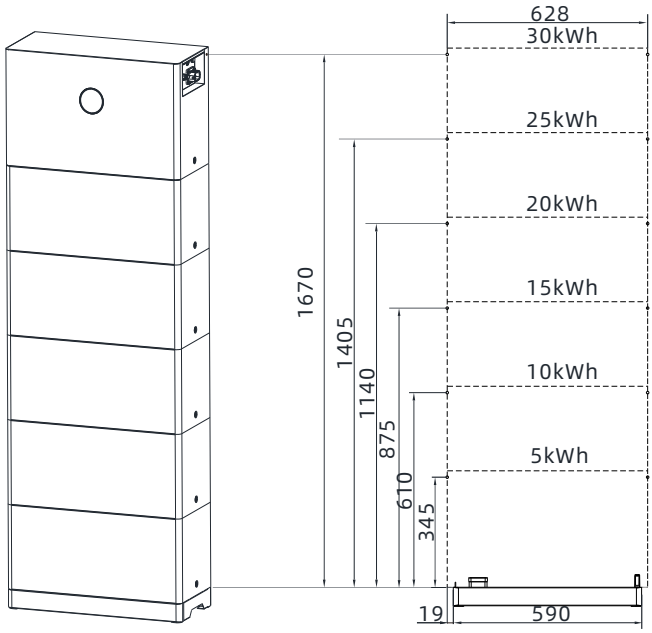

Figure 4.12 Mounting hole dimensions

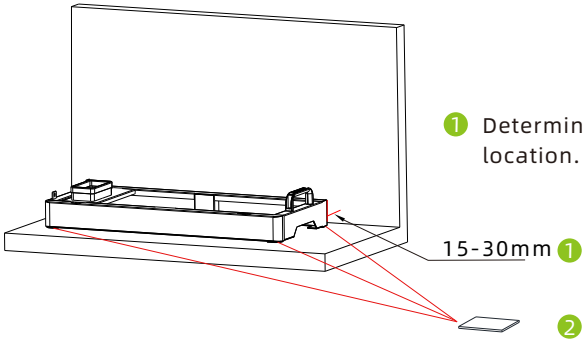

1 Determine the installation location.

2 Add shims beneath the base to level it according to the actual installation location requirements.

Figure 4.13 Base mounting

Step1: Place the base against the wall with a distance of 15-30mm from the wall. According to the actual installation position requirements, add shims under the base to level it.

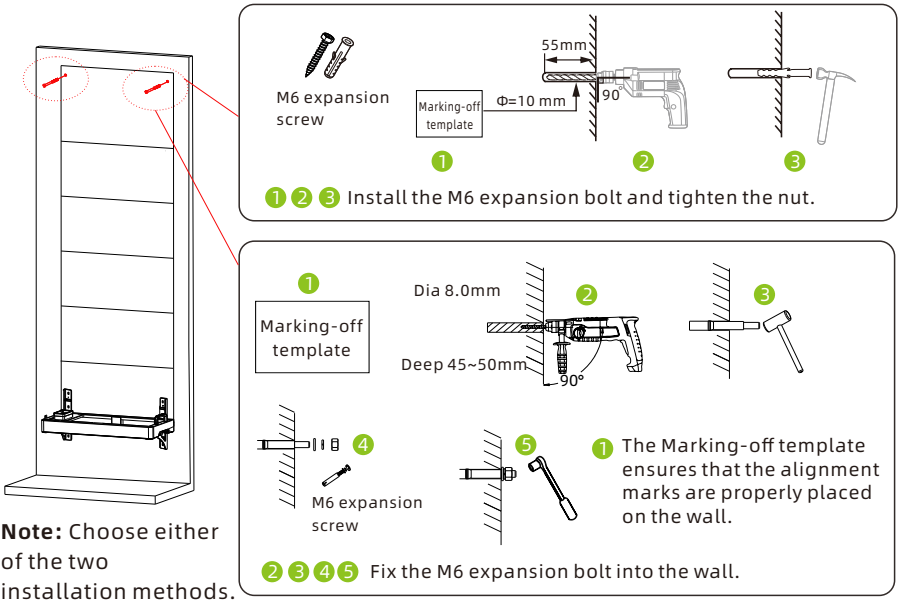

Note: Choose either of the two installation methods.

Figure 4.14 Install the expansion bolt

Step2: Use the Mark-off template to determine the hole locations for installing the Master Module, then mark the holes with a marker pen. Drill holes using a hammer drill (8 mm diameter carbide drill bit; hole depth 45 mm to 50 mm). Install M6 expansion bolts.

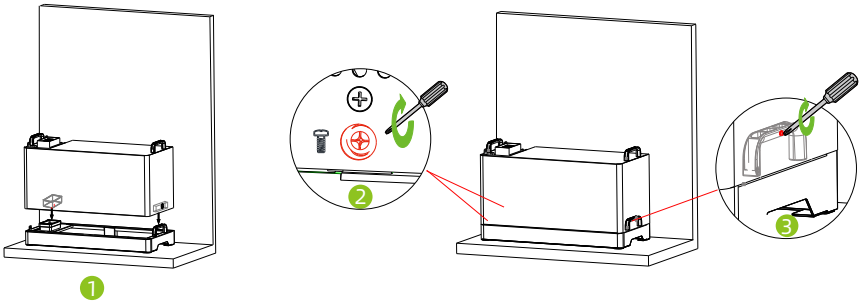

1 Place the first Battery Module on the base.

2 3 Install the mounting screws securing both sides of the Battery Module to the base.

Figure 4.15 Install the Battery Module

Step3: Place the Battery Module on the base, and install the fixing screws between the two sides of the Battery Module and the base. If the customer is installing a 2.5kW/5kWh system, simply install the Master Module on the base.

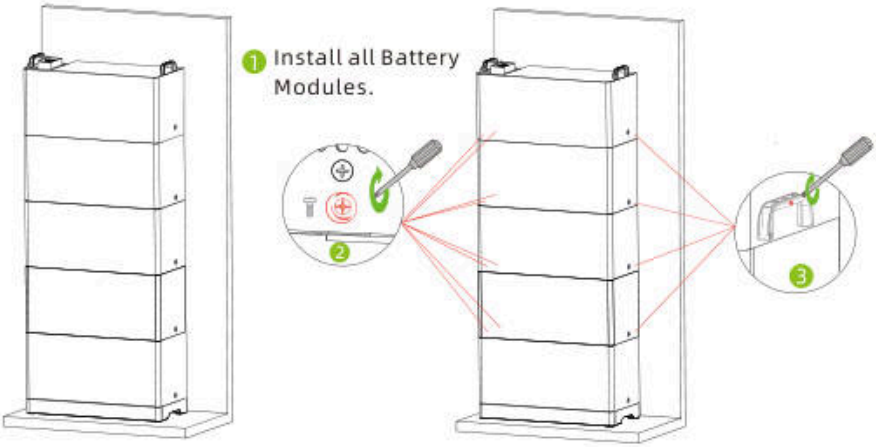

2 3 Install the mounting screws on both sides of the Battery Module.

Figure 4. 16 Install all Battery Modules

Step4: Install all Battery Modules (no more than 5) and tighten the screws on both sides of the Battery Modules.

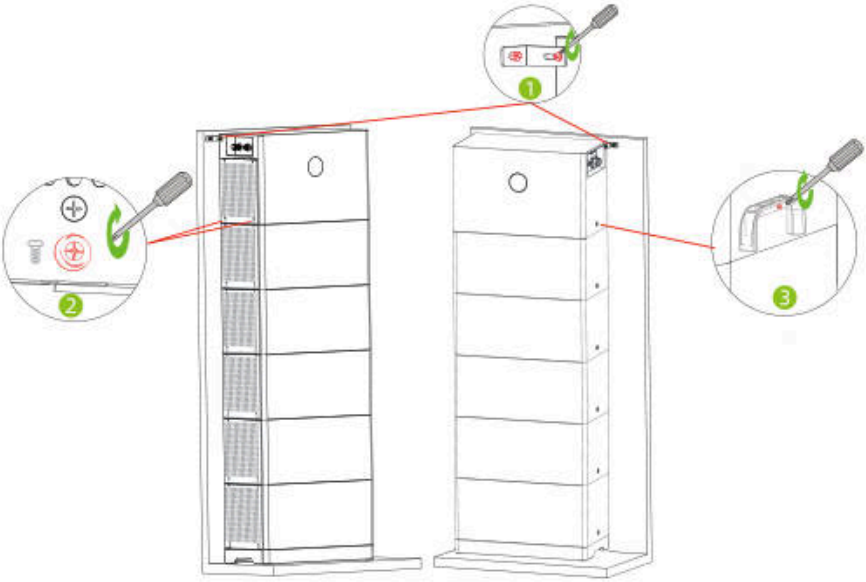

1. Install the Master Module at the very top position, then install the connectors on both sides of the Master Module. Finally, tighten the two screws to secure the Master Module to the wall.
2. 3. Install the mounting screws on both sides of the Master Module and Battery Module.

Figure 4.17 Install the Master Module

Step5: Install the Master Module at the topmost position, then install the connectors on both sides of the Master Module, secure the Master Module to the wall, and then tighten the fixing screws between the Master Module and the Battery Module.

NOTICE	➢ The number of Battery Module in a floor-mounted installation shall not exceed five. ➢ If installing 2/3 APX M-S3 systems, ensure the lateral distance between each battery column is at least 300mm.

4.3.3.2 Dual-cluster Parallel Installation

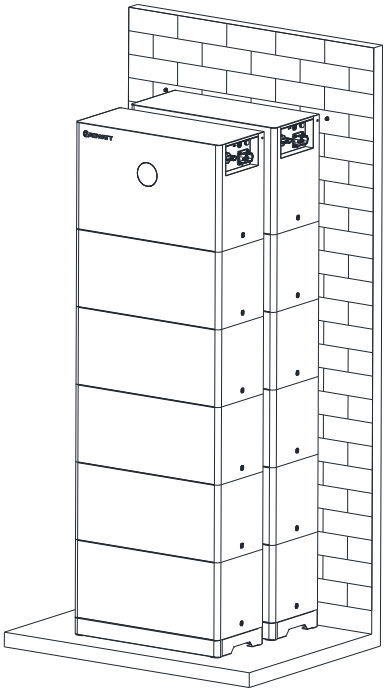

Figure 4.18 Install two clusters of batteries

Step1: Follow Section 4.3.2.1 to install up to Step 5, but do not install the connectors between the Master Module and the wall; then, following the dual-cluster parallel installation requirements (figure4.2), install the second battery cluster in the same manner.

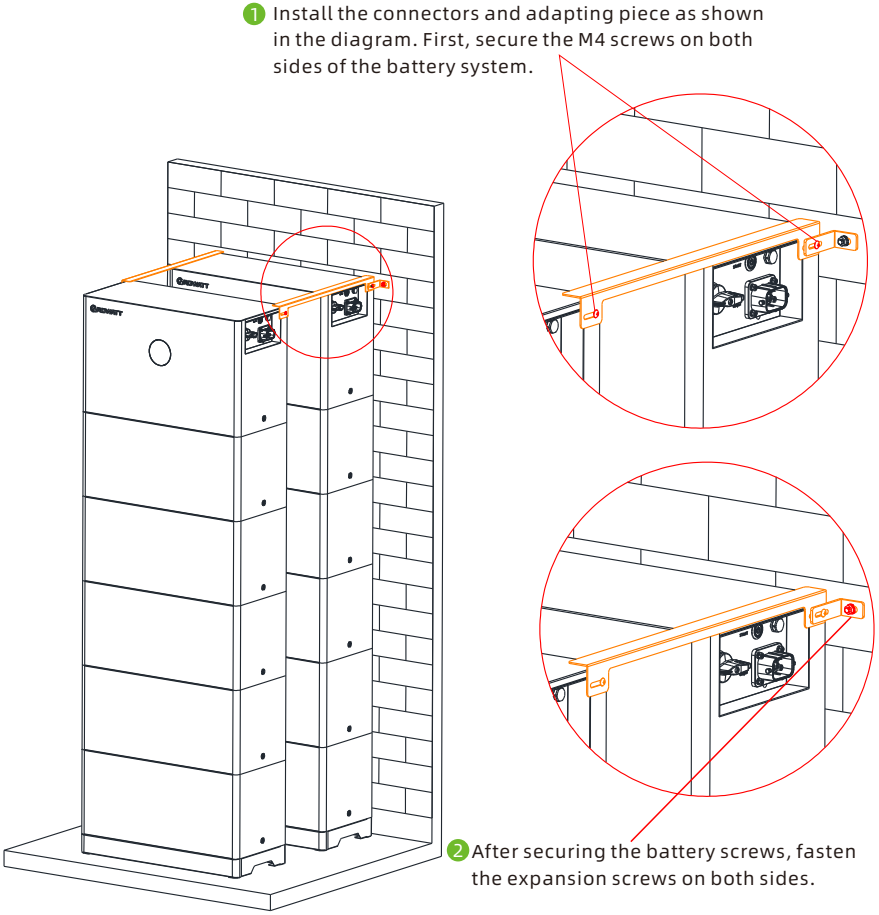

Figure 4. 19 Install the adapting piece

Step 2: Installing the adapting piece between both sides of the battery cluster: First, install the adapteing piece and connector according to the diagram, then tighten the fixing screws between the adapting piece and both sides of the batteries, and finally secure the connectors to the expansion screws on both sides.

4.3.3 Wall-mounted Installation

Unit: mm

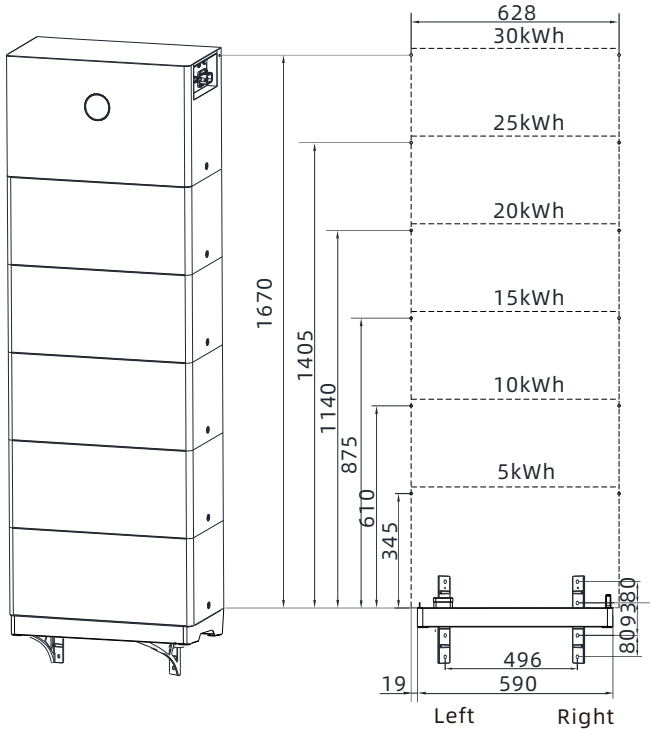

Figure 4. 20 Wall-mounted installation drilling locations

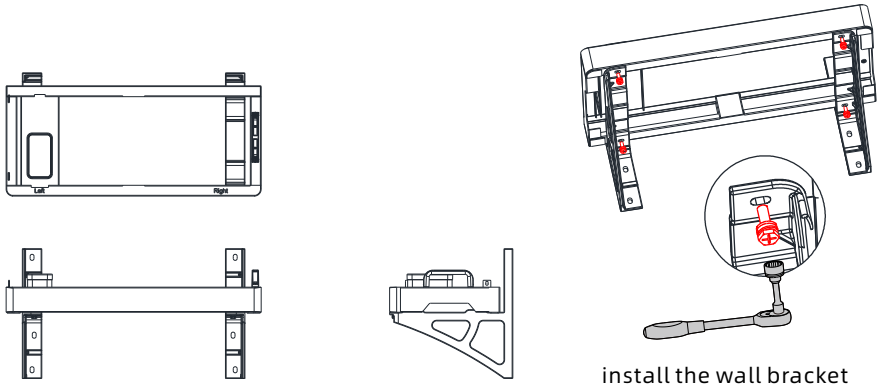

Figure 4. 21 Install the mounting bracket

Step1: Install the mounting bracket

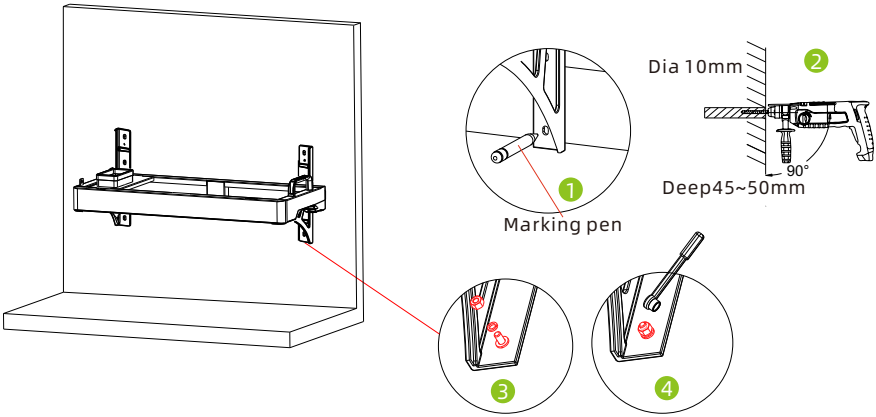

1 Mark the hole positions.

2 Drilling eight holes.

3 4 Fix the bracket on the wall.

Figure 4. 22 Determine the hole positions for installing the bracket

Step2: Level the mounting holes using a level, and mark the hole positions for installing the bracket using a marker. Drill 8 holes (alloy drill diameter: 10mm; hole depth: 45mm to 50mm).

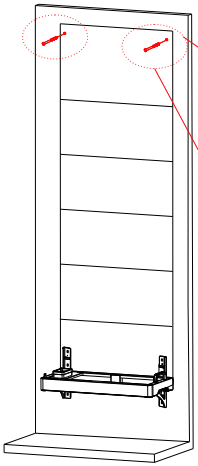

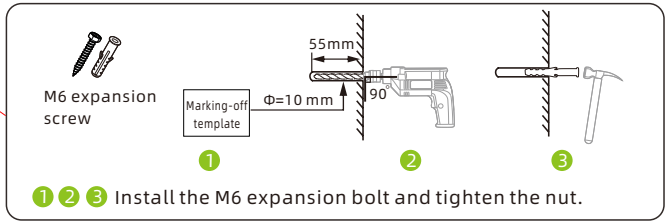

1 2 3 Install the M6 expansion bolt and tighten the nut.

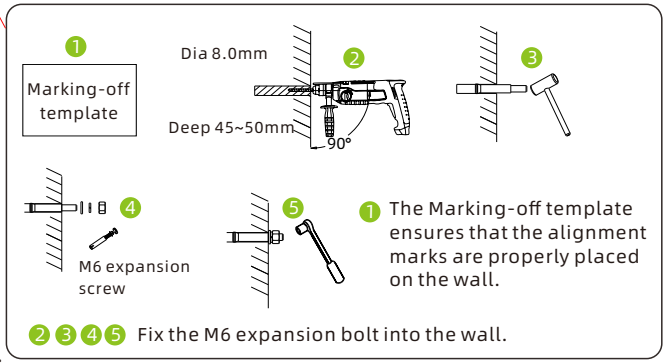

1 The Marking-off template ensures that the alignment marks are properly placed on the wall.

2 3 4 5 Fix the M6 expansion bolt into the wall.

Note: Choose either of the two installation methods.

Figure 4.23 The marking-off template and install the expansion bolt

Step3: Use marking-off template to mark the mounting holes for the Master Module. Drill two holes (alloy drill bit diameter: 8mm; drilling depth: 45mm-50mm).

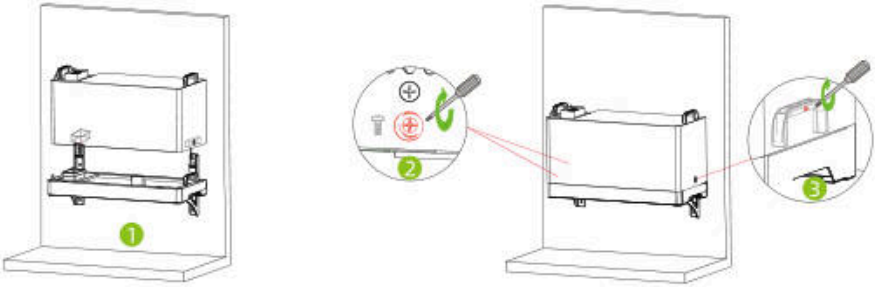

❶ Place the first Battery Module on the wall bracket.

❷❸ Install the mounting screws securing both sides of the Battery Module to the wall bracket.

Figure 4. 24 Install the Battery Module

Step4: Place the Battery Module on the wall bracket, and install the fixing screws between the two sides of the Battery Module and the base. If the customer is installing a 2.5kW/5kWh system, simply install the Master Module on the wall bracket.

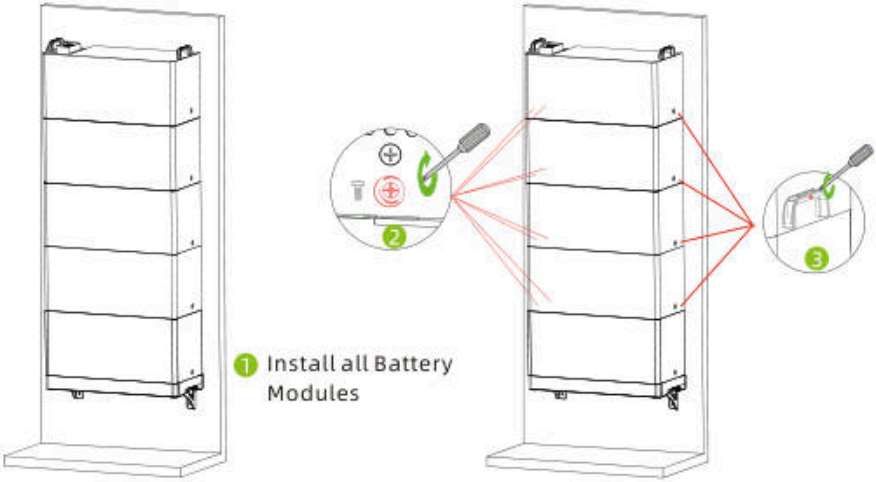

❷❸ Install the mounting screws on both sides of the Battery Module.

Figure 4.25 Install all Battery Modules

Step5: Install all Battery Modules (no more than 5) and tighten the fixing screws on both sides between the Battery Modules.

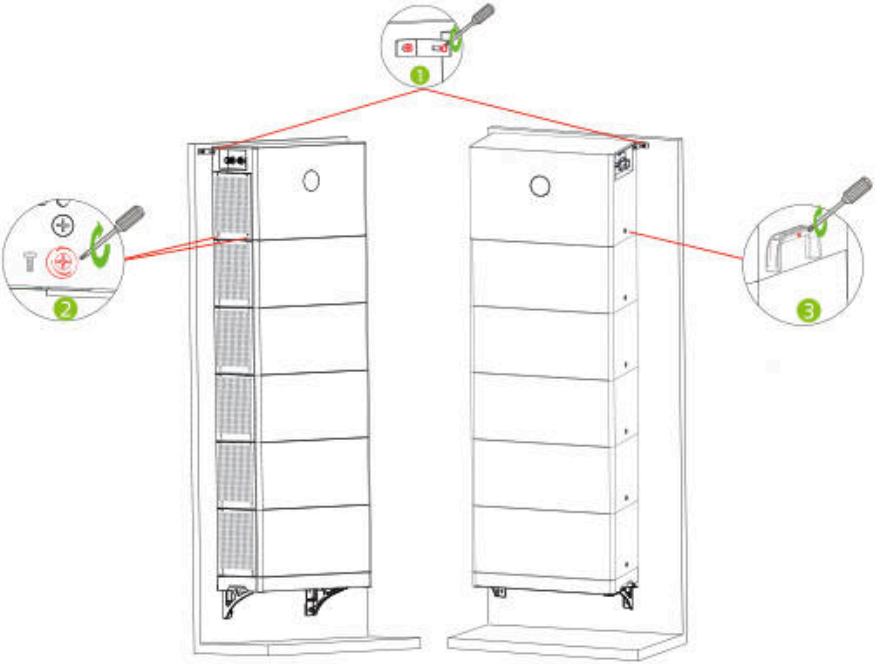

1. Install the Master Module at the very top position, then install the connectors on both sides of the Master Module. Finally, tighten the two screws to secure the Master Module to the wall.

2. 3. Install the mounting screws on both sides of the Master Module and Battery Module.

Figure 4. 26 Tighten the screws between the modules.

Step6: Install the Master Module at the topmost position, install the connectors on both sides of the Master Module, secure the Master Module to the wall, and then tighten the fixing screws between the Master Module and the Battery Modules.

4.4 Electrical Connection

WARNING	➢ Do not forget to wear ESD wrist strap and gloves, safety gloves and goggles. ➢ For wiring on the inverter side, please refer to the inverter's user manual.

4.4.1 Communication Cable Connection

Table 4. 2 Communication port pin definition

APX 5.0-30.0M-S3			MOD-HU/MID-HU			MIN-XH2 (Rj45 version)			Communication port pinout
INV	1	INV.EN(-)	COM-BAT	1	BAT.EN-	COM-BAT	1	BAT.EN-	
	2	INV.EN(+)		2	BAT.EN+		2	BAT.EN+	
	3	M3_CAN2_L		3	CAN.L.M3		3	\	
	4	DSP_CAN2_L		4	CAN.L.DSP		4	\	
	5	DSP_CAN2_H		5	CAN.H.DSP		5	\	
	6	M3_CAN2_H		6	CAN.H.M3		6	\	
	7	RS485_B(B)		7	485B.BAT		7	485B/CAN.L	
	8	RS485_A(A)		8	485A.BAT		8	485A/CAN.H	

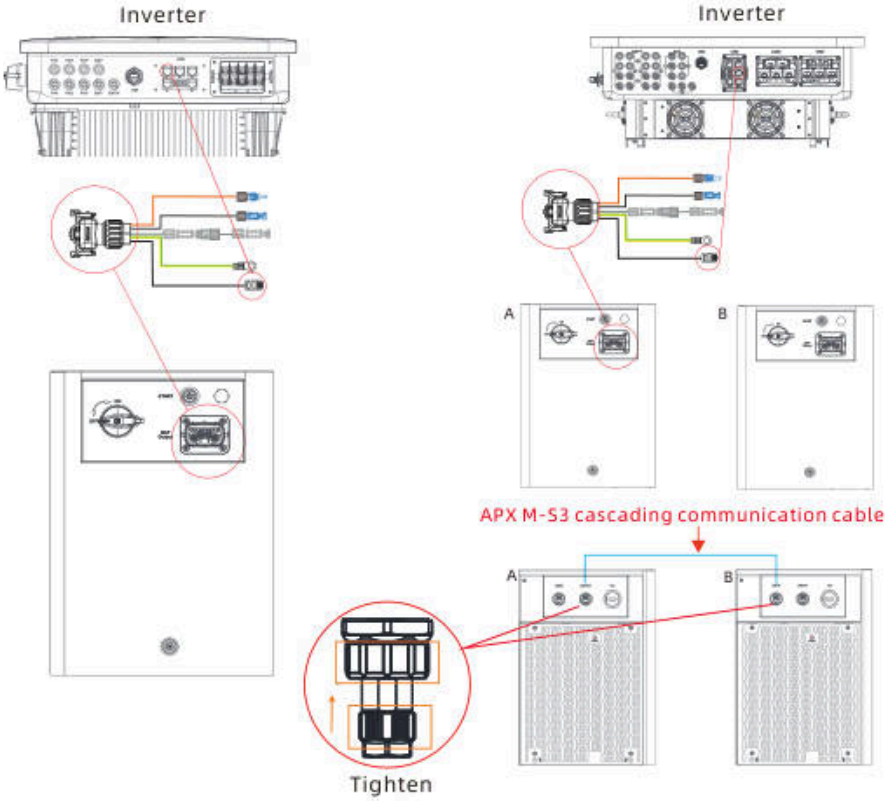

Figure 4. 27 Communication cable wiring diagram

Note:
Wiring method for APX M-S3 systems in parallel clusters:
When matching with MID-HU series inverter (supporting up to 3 clusters), connect the first APX M-S3 cluster to the inverter using the BAT→INV communication cable. Then, connect the Link-out port of the first cluster to the Link-in port of the second cluster using a cascading communication cable, and so on;
When matching with MID-XH series inverter (supporting up to 2 clusters), connect all APX M-S3 clusters to the inverter separately using their respective BAT→INV communication cables. Then, connect the Link-out port of the first cluster to the Link-in port of the second cluster using a cascading communication cable.

NOTICE	➢ If you need to install 2/3 APX M-S3 battery systems, you must purchase additional cascading communication cables. ➢ For unused communication ports, please tighten the waterproof cover.

4.4.2 System Connection

NOTICE	Master Module includes a DC switch. Therefore, a DC circuit breaker is not recommended to be installed between the battery system and the inverter. If you have installed a DC circuit breaker, do not perform operations on it with power-on, otherwise the equipment may be damaged. And you need to choose the breaker with the following specifications. • Voltage: 1000Vdc • Current: 35Adc

4.4.2.1 Battery Capacity Description

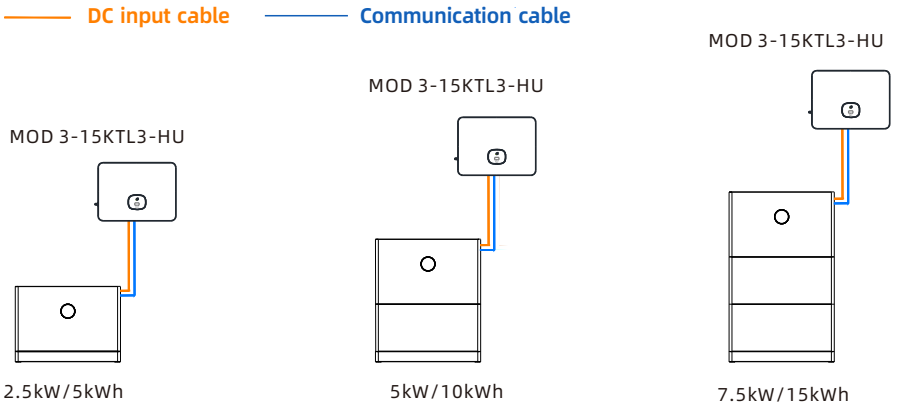

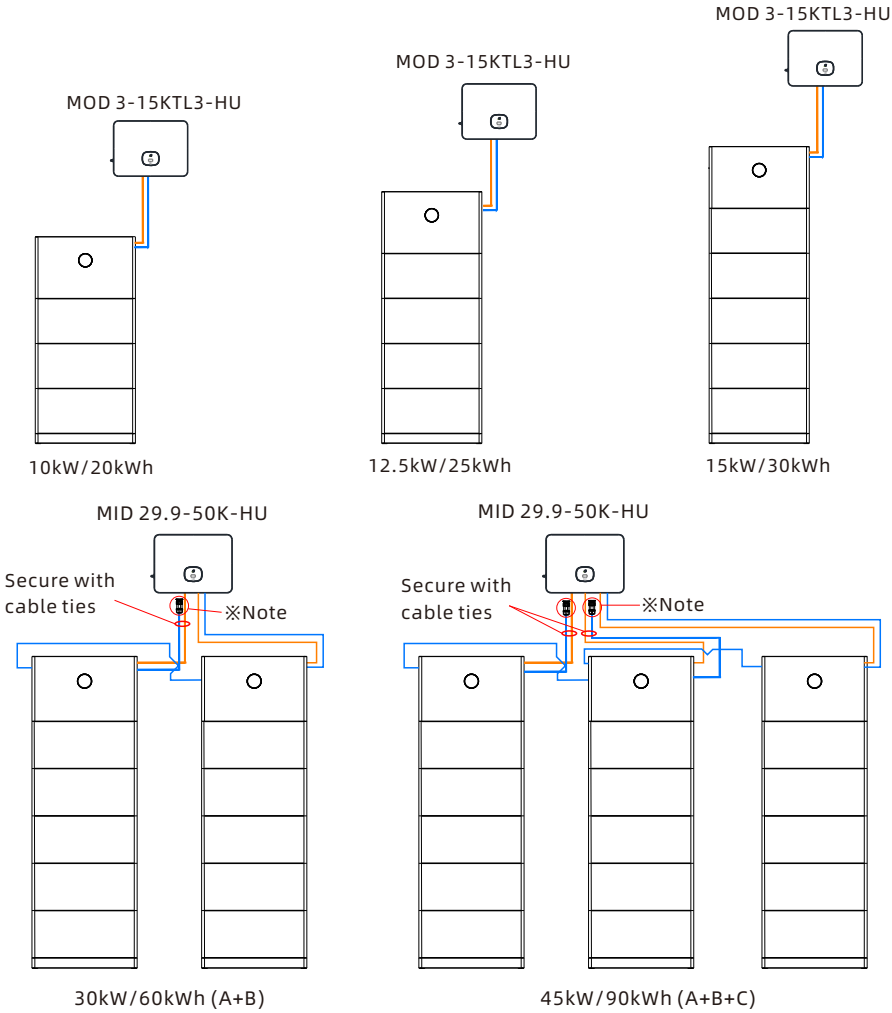

Note: For the MID 29.9-50K-HU inverter, when batteries are used in multi-cluster, connect the "APX→INV communication cable" from only one cluster to the inverter. For the remaining cluster(s), seal the corresponding cable with the supplied waterproof cap.

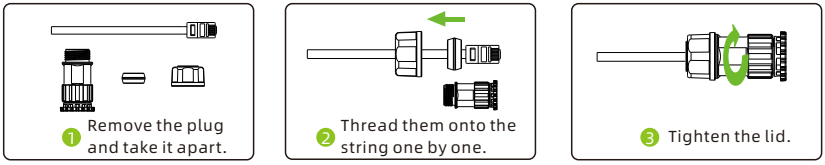

Figure 4. 28 Installation diagram of APX M-S3 system with the capacity of 5-90kWh

Note:
When cascading 2/3 APX M-S3 systems, please purchase the cascading communication cables and select the installation locations for the APX M-S3 and inverter based on the cable length.

4.4.2.2 APX M-S3 System Wiring Diagram

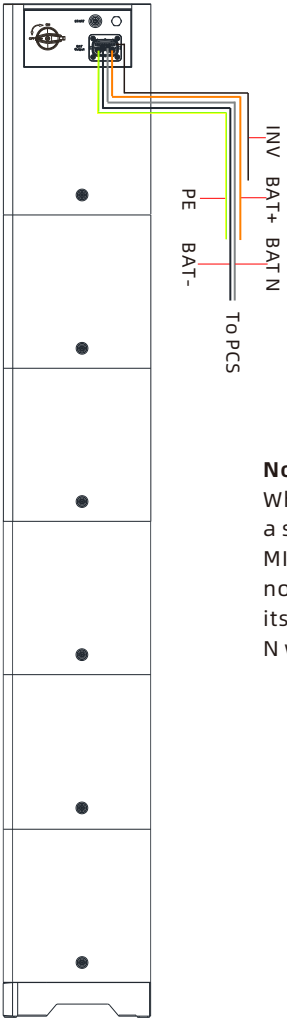

Note:
When the APX M-S3 system is used with a single-phase inverter (such as the MIN-XH2 series), the gray N wire does not need to be connected; instead, seal its connector socket with a dust cap. The N wire extension is also not required.

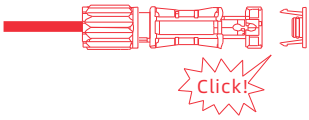

Figure 4.29 APX M-S3 system wiring diagram

Before installing the Master Module output cable, you need to remove the dust cover from the Master Module output terminal.

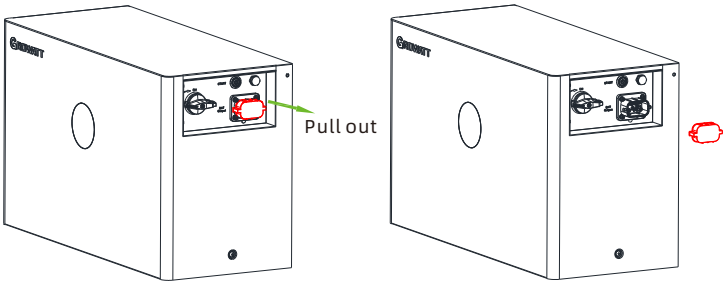

Figure 4.30 Remove the dust cover from the Master Module output terminal

Install the output cables of the Master Module:

Connection:

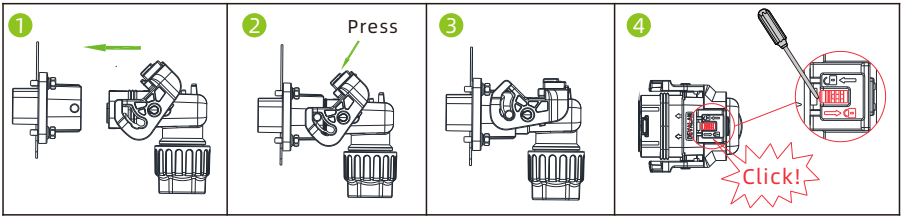

1 Insert the wire terminals into the "BAT Output" port of the Master Module.

2 3 Press the knob in the direction shown.

4 Use a screwdriver to push the latch in the direction shown to lock the terminal.

Disconnection:

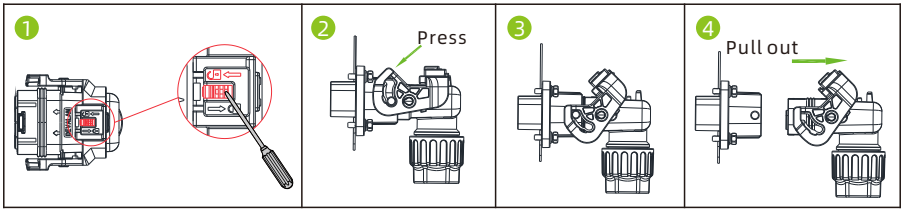

1 Use a screwdriver to push the clip in the direction shown to unlock the terminal.

2 3 Press the knob in the direction shown.

4 Pull the wire terminals outward.

Figure 4.31 Connection and disconnection of Master Module output cables

5 Power on/off the APX M-S3 System

NOTICE	➢ Personnel who install and operate the battery system must receive thorough training and possess the local national required qualification. Only qualified and trained professionals are allowed to install, operate and maintain the equipment. ➢ Please stand on dry insulating objects and do not wear conductive material such as watches and necklace during operation. Insulated tools should be used. ➢ Avoid contact with any parts with electric potential difference. ➢ Hang the warning sign: Do not touch. Authorized personnel only. ➢ If abnormality is found when the equipment is energized, turn off the DC switch of the Master Module immediately. After the fault is rectified, turn on the DC switch again. ➢ Make sure the inverter is off before checking the APX M-S3 system. ➢ When connected to an inverter, the APX M-S3 system can be monitored via RS485 communication. If an external datalogger is used, such as ShineWiLan-X2, Shine 4G-X, GrohomeManager-X and ShineLink-X2, you can monitor the APX M-S3 system via the ShineServer remotely.

5.1 Power on the APX M-S3 System

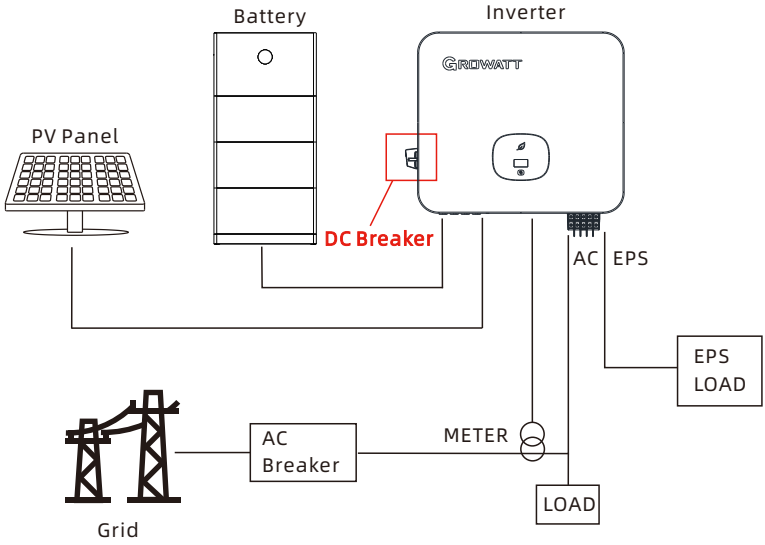

Figure 5.1 System block diagram

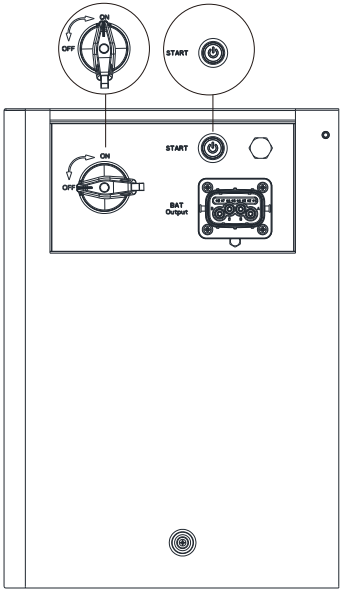

Figure 5.2 Power on the APX M-S3 system

➢ Before powering on the battery, please check if the cable is properly connected.

Power on the APX M-S3 system:
Step 1: Turn on the DC switch of the Master Module(Figure 5.2).
Step 2: Turn on the DC switch of the inverter(Figure 5.1).
Step 3: Turn on the circuit breaker connecting the inverter to the grid(Figure 5-1).
Step 4: Press and hold the "START" button on the Master Module for more than 5 seconds (Figure 5.2).
Step 5: The LED display on the Master Module will light up within 60 seconds, and the start-up is complete.

NOTICE	➢ If the DC switch of the Master Module is in the off state when the device is powered on, do not turn on the DC switch immediately, as this may damage the device.

5.2 Power off the APX M-S3 System

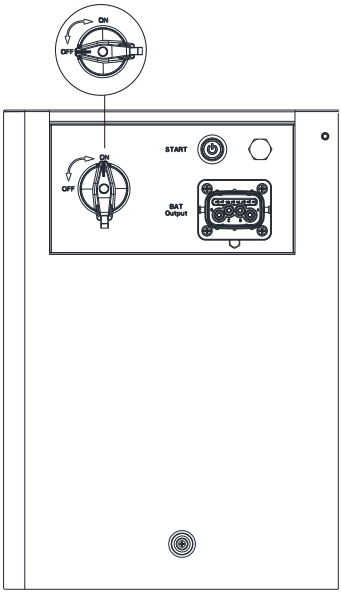

Figure 5.3 Power off the APX M-S3 system

Step 1: Turn off the circuit breaker connecting the inverter to the grid(Figure 5.1).
Step 2: Turn off the DC switch of the inverter(Figure 5.1).
Step 3: Turn off the DC switch of the Master Module(Figure 5.3).
Step 4: After the LED display on the Master Module turns off, wait an additional 5 minutes and the system will fully power down.

NOTICE	➢ The APX M-S3 system cannot be restarted until it is powered off completely.

Maintenance Guide 6

6.1 Preparation

After the system is powered off, the remaining electricity and heat still exist in the chassis, which may cause electric shocks or burns. Therefore, you need to wear protective gloves and perform operations 5 minutes after the system is powered off.

6.2 Battery Module or Master Module Replacement

Note: Replace the Battery Module or Master Module if the following conditions occur: The internal circuit of the Module is faulty, the battery health reaches the end point, the Module appearance is deformed, damaged, or leaks.

- Wear safety gloves.
- Turn off the DC switch of the APX M-S3 system and wait 5 minutes until the system is completely de-energized.
- Disconnect the power cables and communication cables between the battery system and the inverter.
- Unscrew the safety screws on both sides of the Master Module or the Battery Module. Lift up the Master Module or the Battery Module.
- Put the Master Module or the Battery Module back into the packing case according to the repair procedures and transport the Master Module or the Battery Module to the designated site.
- Install new Battery Module or Master Module following the procedures specified in Section 4.

NOTICE	➢ Both the Master Module and Battery Module contain batteries. Dispose of them in accordance with local laws and regulations. ➢ After the system is powered off, beware the residual heat of the heat sink to avoid burns.

6.3 LED Indicators

Table 6.1 LED indicator descriptions

		Meaning 指示含义
Steady green 绿灯常亮	Slow-blinking green 绿灯慢闪	Standby mode 待机模式
Step up in clockwise 顺时针旋转	Steady green 绿灯常亮	Charging mode 充电模式
Step down in anti-clockwise 逆时针旋转	Steady green 绿灯常亮	Discharge mode 放电模式
N/A	Quick-blinking green 绿灯快闪	Protect 保护
N/A	Steady red 红灯常亮	System failure 系统故障
LED clockwise activation with "UP" display LED顺时针点亮，数显显示"UP"	N/A	Upgrade 升级
Off	Off	Hibernation mode 休眠模式
Quick-blinking green: on for 0.5s and then off for 0.5s, on for 0.5s and then off for 2s 绿灯快闪：亮0.5s,灭0.5s,亮0.5s,灭2s		
Slow-blinking green: on for 0.5s and then off for2s 绿灯慢闪：亮0.5s,灭2s		

Note:

(1) During the upgrade process, the LEDs will light up in a clockwise sequence to indicate progress.

(2) During normal operation, the LED display of the Master Module will automatically turn off after 1 minute of inactivity, and tapping the front panel of the Master Module can reawaken it.

6.4 Troubleshooting

Table 6. 2 Master Module and Battery Module shared fault codes

Fault Code	Fault Description	Troubleshooting Suggestions
Error 416(1)	Transient overvoltage/overcurrent fault	1. Turn off the air circuit breaker of Master Module. Confirm that the whole system has been completely powered off. Then check if the PV configuration is oversized and if the PV open-circuit voltage is excessively high; 2. Turn on the air circuit breaker of Master Module and long press the START button to power on the equipment; 3. If the fault message persists, contact the manufacturer.
Error 417(1)	Hardware and software model mismatch	1.Turn off the air circuit breaker of Master Module. Confirm that the whole system has been completely powered off.; 2.contact the manufacturer.
Error 407(0)	Battery open circuit	1. Turn off the air circuit breaker of Master Module. Confirm that the whole system has been completely powered off; 2. Turn on the air circuit breaker of Master Module and long press the START button to power on the equipment; 3. If the fault message persists, contact the manufacturer.
Error 407(1)	BUS1 Open Circuit	1. Turn off the air circuit breaker of Master Module. Confirm that the whole system has been completely powered off, then Check whether the wiring terminals between modules are fully connected; 2. Turn on the air circuit breaker of Master Module and long press the START button to power on the equipment; 3. If the fault message persists, contact the manufacturer.
Error 700(0)	Internal temperature sampling resistor is open-circuited	If the device temperature is above -20°C and the fault persists after restarting, contact the manufacturer.

Fault Code	Fault Description	Troubleshooting Suggestions
Error 502(0)	Battery voltage is low	Check the battery-side voltage via network monitoring data to ensure it is within the normal range (battery voltage > 14V). If the battery voltage is below 14V, contact the manufacturer.
Error 411(1)	Communication between the Battery Module's monitoring and main control chip is abnormal	1. Turn off the air circuit breaker of Master Module. Confirm that the whole system has been completely powered off; 2. Turn on the air circuit breaker of Master Module and long press the START button to power on the equipment; 3. If the fault message persists, contact the manufacturer.
Error 416(2)	LLC Resonant Inductor Abnormalities	1. Turn off the air circuit breaker of Master Module. Confirm that the whole system has been completely powered off; 2. Remove the faulty module and please contact the manufacturer.
Error 303(1)	LLC Series-Parallel Relay Malfunction	1. Turn off the air circuit breaker of Master Module. Confirm that the whole system has been completely powered off; 2. Remove the faulty module and please contact the manufacturer.
Error 506(3)	BUS1 Short Circuit (BUS Line Reverse Connection)	1. Turn off the air circuit breaker of Master Module. Confirm that the whole system has been completely powered off; 2. Turn on the air circuit breaker of Master Module and long press the START button to power on the equipment; 3. If the fault message persists, contact the manufacturer.
Error 1030	Single-cell battery failure	1. Turn off the air circuit breaker of Master Module. Confirm that the whole system has been completely powered off; 2. Turn on the air circuit breaker of Master Module and long press the START button to power on the equipment; 3. If the fault message persists, contact the manufacturer.

Fault Code	Fault Description	Troubleshooting Suggestions
Error 1035	Front-end chip failure	1. Turn off the air circuit breaker of Master Module. Confirm that the whole system has been completely powered off; 2. Turn on the air circuit breaker of Master Module and long press the START button to power on the equipment; 3. If the fault message persists, contact the manufacturer.
Error 1062	Single-unit overvoltage fast protection fault	1. Battery is fully charged and will automatically recover; 2. If the fault message persists, please contact the manufacturer;
Error 1074	FUSE failure	1. Turn off the air circuit breaker of Master Module. Confirm that the whole system has been completely powered off; 2. Turn on the air circuit breaker of Master Module and long press the START button to power on the equipment; 3. If the fault message persists, contact the manufacturer.
Error 1075	UART Communication Failure	1. Turn off the air circuit breaker of Master Module. Confirm that the whole system has been completely powered off; 2. Turn on the air circuit breaker of Master Module and long press the START button to power on the equipment; 3. If the fault message persists, contact the manufacturer.
Error 1105	High-temperature failure	1. Turn off the air circuit breaker of Master Module. Confirm that the whole system has been completely powered off; 2. Turn on the air circuit breaker of Master Module and long press the START button to power on the equipment; 3. If the fault message persists, contact the manufacturer.

Fault Code	Fault Description	Troubleshooting Suggestions
Error 431(0)	BOOT error	1. Turn off the air circuit breaker of Master Module. Confirm that the whole system has been completely powered off; 2. Turn on the air circuit breaker of Master Module and long press the START button to power on the equipment; 3. If the fault message persists, contact the manufacturer.
Error 419(5)	Incompatible hardware and software versions	1. Turn off the air circuit breaker of Master Module. Confirm that the whole system has been completely powered off; 2. Turn on the air circuit breaker of Master Module and long press the START button to power on the equipment; 3. If the fault message persists, contact the manufacturer.
Error 411(1)	Communication between the Battery Module's monitoring and main control chip is abnormal	1. Turn off the air circuit breaker of Master Module. Confirm that the whole system has been completely powered off; 2. Turn on the air circuit breaker of Master Module and long press the START button to power on the equipment; 3. If the fault message persists, contact the manufacturer.
Error 411(5)	Communication error with CM	1. Turn off the air circuit breaker of Master Module. Confirm that the whole system has been completely powered off; 2. Turn on the air circuit breaker of Master Module and long press the START button to power on the equipment; 3. If the fault message persists, contact the manufacturer.

Fault Code	Fault Description	Troubleshooting Suggestions
Error 411(6)	Parallel connection failure	1. Turn off the air circuit breaker of Master Module. Confirm that the whole system has been completely powered off; 2. Turn on the air circuit breaker of Master Module and long press the START button to power on the equipment; 3. If the fault message persists, contact the manufacturer.
Error 411(7)	Multi-host parallelization failed	1. Turn off the air circuit breaker of Master Module. Confirm that the whole system has been completely powered off; 2. Turn on the air circuit breaker of Master Module and long press the START button to power on the equipment; 3. If the fault message persists, contact the manufacturer.

Table 6.3 Master Module and Battery Module shared protect codes

Protect Code	Fault Description	Troubleshooting Suggestions
Protect 408(0)	Over-temperature protection	1. Turn off the air circuit breaker of Master Module. Confirm that the whole system has been completely powered off and wait for 30 minutes; 2. Turn on the air circuit breaker of Master Module and long press the START button to power on the equipment; 3. If the fault message persists, contact the manufacturer.
Protect 707(0)	Over-load protection	1. If it is running in off-grid mode, reduce the load at home, and it will automatically recover after 10 minutes. 2 If an error is reported in grid-connected mode, please contact the manufacturer.
Protect 603(1)	BUS1 Soft Start Failure Protection	1. Turn off the air circuit breaker of Master Module. Confirm that the whole system has been completely powered off. 2. Turn on the air circuit breaker of Master Module and long press the START button to power on the equipment; 3. If the fault message persists, contact the manufacturer.
Protect 603(2)	BUS2 Soft Start Failure Protection	1. Turn off the air circuit breaker of Master Module. Confirm that the whole system has been completely powered off. 2. Turn on the air circuit breaker of Master Module and long press the START button to power on the equipment; 3. If the fault message persists, contact the manufacturer.
Protect 502(1)	BUS2 low voltage	1. Turn off the air circuit breaker of Master Module. Confirm that the whole system has been completely powered off. 2. Turn on the air circuit breaker of Master Module and long press the START button to power on the equipment; 3. If the fault message persists, contact the manufacturer.

Protect Code	Fault Description	Troubleshooting Suggestions
Protect 1001	Overvoltage Protection for Charging Cells (Level 1)	1.The battery is fully charged and charging is limited. 2. It will recover automatically.
Protect 1003	Discharge undervoltage protection	1. The battery has been discharged completely and discharging is limited. 2. It will recover automatically.
Protect 1005	Large single cell voltage difference protection	1. The battery voltage difference is large,charging and discharging are limited, and it can automatically recover; 2. If the fault message persists, contact the manufacturer.
Protect 1007	Charging total voltage overvoltage protection	1. The battery is fully charged and charging is limited. 2. It will recover automatically.
Protect 1009	Discharge total voltage undervoltage protection	1. The battery has been discharged completely and discharging is limited. 2. It will recover automatically.
Protect 1013	Discharge high temperature protection	1. The battery temperature is too high, chargingand discharging are limited. 2. It can automatically recover.
Protect 1015	Low-Temperature Discharge Protection	1. The battery temperature is too low, charging and discharging are limited. 2. It canautomatically recover.
Protect 1017	Large PACK temperature difference protection	1. The battery temperature difference is too large, charging and discharging are limited. 2. It can automatically recover; 3. If the fault message persists, contact the manufacturer.
Protect 1021	Discharge overcurrent protection	1. The battery current is too large, and discharging is limited. 2. It can automatically recover.

Protect Code	Fault Description	Troubleshooting Suggestions
Protect 1023	Charging overcurrent protection	1. The battery current is too large, and charging is limited. 2. It can automatically recover.
Protect 1025	External CAN communication protection	1. Observe whether Master Module and Battery Module are powered on normally; 2. Turn off the air circuit breaker of the Master Module. Confirm that the whole system has been completely powered off. 3. Check whether the wiring terminals between modules are fully connected.Then turn on the breaker and long press the START button to power on the machine; 4. If the fault message persists, contact the manufacturer.
Protect 1031	Current sampling fault protection	1. Turn off the air circuit breaker of Master Module. Confirm that the whole system has been completely powered off. 2. Turn on the air circuit breaker of Master Module and long press the START button to power on the equipment; 3. If the fault message persists, contact the manufacturer.
Protect 1034	Charging high temperature protection	1. The battery temperature is too high, and charging is limited. 2.It can automatically recover.
Protect 1038	EEPROM Failure Protection	1. Turn off the air circuit breaker of Master Module. Confirm that the whole system has been completely powered off. 2. Turn on the air circuit breaker of Master Module and long press the START button to power on the equipment; 3. If the fault message persists, contact the manufacturer.

Protect Code	Fault Description	Troubleshooting Suggestions
Protect 1039	Low-Temperature Charge/Limit Current Non-Response Protection	1. The temperature is too low. Charging current exists, while charging is limited. It can automatically recover when the temperature rises; 2. Turn off the air circuit breaker of the Master Module. Confirm that the whole system has been completely powered off. Then turn on the breaker and long press the START button to power on the machine; 3. If the fault message persists, contact the manufacturer.
Protect 1041	Charging low temperature protection	1.The temperature is too low, and charging is limited. 2.It can automatically recover.
Protect 1042	Module voltage(sampling) abnormality protection	1. Turn off the air circuit breaker of Master Module. Confirm that the whole system has been completely powered off; 2. Turn on the air circuit breaker of Master Module and long press the START button to power on the equipment; 3. If the fault message persists, contact the manufacturer.
Protect 1044	EEPROM calibration parameter fault protection	1. Turn off the air circuit breaker of Master Module. Confirm that the whole system has been completely powered off.; 2. Turn on the air circuit breaker of Master Module and long press the START button to power on the equipment; 3. If the fault message persists, contact the manufacturer.
Protect 1047	Internal ambient temperature over-high protection	1. The internal ambient temperature is too high. Charging and discharging are limited; 2. It can automatically recover.

Fault Code	Fault Description	Troubleshooting Suggestions
Error 411(7)	Multi-Host Parallel Operation Failure	1. Turn off the air circuit breaker of Master Module. Confirm that the whole system has been completely powered off. 2.Check whether the integration terminals between modules are fully connected. 3. Turn on the air circuit breaker of Master Module and long press the START button to power on the equipment; 4. If the fault message persists, contact the manufacturer.
Error 416(1)	Transient overvoltage/overcurrent fault	1. Turn off the air circuit breaker of Master Module. Confirm that the whole system has been completely powered off. Then check if the PV configuration is oversized and if the PV open-circuit voltage is excessively high. 2. Turn on the air circuit breaker of Master Module and long press the START button to power on the equipment; 3. If the fault message persists, contact the manufacturer.
Error 417(1)	Hardware and software model mismatch	Contact the manufacturer for support.
Error 411(1)	Serial communication error	1. Turn off the air circuit breaker of Master Module. Confirm that the whole system has been completely powered off. 2.Check whether the integration terminals between modules are fully connected. 3. Turn on the air circuit breaker of Master Module and long press the START button to power on the equipment; 4. If the fault message persists, contact the manufacturer.

Fault Code	Fault Description	Troubleshooting Suggestions
Error 700(0)	NTC open circuit	1. Turn off the air circuit breaker of Master Module. Confirm that the whole system has been completely powered off. 2. Turn on the air circuit breaker of Master Module and long press the START button to power on the equipment; 3. If the fault message persists, contact the manufacturer.
Error 506(3)	BUS1 Short Circuit (BUS Line Reverse Connection)	1. Turn off the air circuit breaker of Master Module. Confirm that the whole system has been completely powered off. 2.Check whether the integration terminals between modules are fully connected. 3. Turn on the air circuit breaker of Master Module and long press the START button to power on the equipment; 4. If the fault message persists, contact the manufacturer.
Error 303(0)	Main Relay Failure	1. Turn off the air circuit breaker of Master Module. Confirm that the whole system has been completely powered off. 2. Turn on the air circuit breaker of Master Module and long press the START button to power on the equipment; 3. If the fault message persists, contact the manufacturer.
Error 700(2)	Unbalanced Overload Error	1. Turn off the air circuit breaker of Master Module. Confirm that the whole system has been completely powered off. 2. Turn on the air circuit breaker of Master Module and long press the START button to power on the equipment; 3. If the fault message persists, contact the manufacturer.
Warning 506(1)	Circuit Breaker Error	1. Check if the circuit breaker on the Master Module is closed. 2. Restart the system. If the fault persists, contact the manufacturer.

Protect Code	Fault Description	Troubleshooting Suggestions
Protect 1087	SOH too low protection	1. Turn off the air circuit breaker of Master Module. Confirm that the whole system has been completely powered off.; 2. Turn on the air circuit breaker of Master Module and long press the START button to power on the equipment; 3. If the fault message persists, contact the manufacturer.
Protect 1088	Low temperature charging overcurrent protection	1.The temperature is too low, charging current exists, charging is limited; 2.It can automatically recover.
Protect 1099	Low temperature overvoltage protection	1.The temperature is too low and the voltage has reached full charge; 2.It can automatically recover; 3.Turn off the air circuit breaker of the Master Module. Confirm that the whole system has been completely powered off. Then turn on the breaker and long press the START button to power on the machine;If the fault message persists, contact themanufacturer.
Protect 1128	BOOT area flash is damaged	1. Turn off the air circuit breaker of Master Module. Confirm that the whole system has been completely powered off.; 2. Turn on the air circuit breaker of Master Module and long press the START button to power on the equipment; 3. If the fault message persists, contact the manufacturer.

Unique fault code of the Master Module

Fault Code	Fault Description	Troubleshooting Suggestions
Error 419(6)	CM and BM hardware models are not compatible.	Contact the manufacturer for support.
Error 431(0)	BOOT error	Contact the manufacturer for support.
Error 417(2)	CAN protocol version mismatch	Contact the manufacturer for support.
Error 419(5)	Incompatible hardware and software versions	Contact the manufacturer for support.
Error 411(0)	Communication between the Master Module and Inverter is abnormal	1. Check whether both the master module and the INV are powered on normally; 2. After powering off, inspect the wiring of the communication cable between the master module and the INV; 3. Power on again; if the Error message persists, contact the manufacturer.
Error 411(3)	Communication error with Master 2	Contact the manufacturer for support.
Error 411(5)	Communication with Battery Module is abnormal	1. Turn off the air circuit breaker of Master Module. Confirm that the whole system has been completely powered off. 2.Check whether the integration terminals between modules are fully connected. 3. Turn on the air circuit breaker of Master Module and long press the START button to power on the equipment; 4. If the fault message persists, contact the manufacturer.
Error 411(6)	Parallel operation failed	1. Turn off the air circuit breaker of Master Module. Confirm that the whole system has been completely powered off. 2. Turn on the air circuit breaker of Master Module and long press the START button to power on the equipment; 3. If the fault message persists, contact the manufacturer.

Unique protection code of the Master Module

Protect Code	Fault Description	Troubleshooting Suggestions
Protect 410(2)	USB communication error	1. Reinsert the USB drive; 2. Replace the USB drive; 3. If the alert persists, contact the manufacturer.
Protect 500(7)	Battery Module offline	1. Verify if any Battery Modules are in sleep mode; 2. After powering off, check whether the communication cables between Battery Modules are properly connected; 3. Power on again. If the alarm persists, contact the manufacturer.
Protect 500(9)	Communication error with CM	1. After powering off, inspect whether the wiring between the master module and its communication cable is correct; 2. Restore power; 3. If the alarm persists, contact the manufacturer.
Protect 408(0)	Over-temperature protection	1. Turn off the air circuit breaker of Master Module. Confirm that the whole system has been completely powered off and wait for 30 minutes; 2. Turn on the air circuit breaker of Master Module and long press the START button to power on the equipment; 3. If the fault message persists, contact the manufacturer.

6.5 Cleaning

1. Checking the heat dissipation
In case that output reduction of the APX M-S3 system occurs regularly due to high temperature, please improve the heat dissipation conditions, such as cleaning the heat sink.
2. Cleaning the APX M-S3 system
If the enclosure of the battery system gets dirty, shut down the system and wait until it is completely powered off. Clean the enclosure and the LED display with a moistened cloth. Do not use any cleaning agents, e.g. solvents or abrasives.
3. Checking the DC switch and cables
Check for any externally visible damage and discoloration of the DC switch and cables regularly. If any visible damage of the DC switch is found, or the cable is damaged or discolored, please contact the installer.
Turn the knob switch from On to Off 5 times in a row every year, which cleans the touch area of the knob switch and extends its electrical endurance.

Technical Specifications 7

7.1 APX 5.0M-B3 (Master Module)

No.	Items	Specifications
1	Model	APX 5.0M-B3
2	Nominal capacity/energy	314Ah/5kWh
3	Rated voltage (Single/Three phase)	400V/750V
4	Maximum current (Single/Three phase)	28.6A/22.72A
5	Battery type	Li-ion (LiFePO4)
6	Operating temperature range	-20℃~55℃
7	Storage conditions	-20°C~10°C/12 months; 10°C~30°C/9 months; 30°C~50°C/6months; 5%-95%RH
8	Cooling	Natural cooling
9	Installation	Wall-mounted installation/ Floor-mounted installation
10	Warranty period	10 years
11	IP rating	IP66
12	Weight	51kg±1kg
13	Dimensions (W/D/H)	590*255*365mm±2mm
14	Certification & Licensing	IEC62619(Cell&Pack)/IEC60730/ IEC62477-1/IEC62040-1/CE(EN61000)/ UN38.3/IEC60529 /REACH
15	Environment requirements	REACH

7.2 APX 5.0P-B3 (Battery Module)

No.	Items	Specifications
1	Model	APX 5.0P-B3
2	Nominal capacity/energy	314Ah/5kWh
3	Rated power	2.5kW
4	Rated voltage (Single/Three phase)	400V/750V
5	Maximum current (Single/Three phase)	7.14A/3.79A
6	Battery type	Li-ion (LiFePO4)
7	Operating temperature range	-20℃~55℃
8	Storage conditions	-20°C~10°C/12 months; 10°C~30°C/9 months; 30°C~50°C/6months; 5%-95%RH
9	Cooling	Natural cooling
10	Installation	Wall-mounted installation/ Floor-mounted installation
11	Warranty period	10 years
12	IP rating	IP66
13	Weight	45kg±1kg
14	Dimensions (W/D/H)	590*255*265mm±2mm
15	Certification & Licensing	IEC62619(Cell&Pack)/IEC60730/ IEC62477-1/IEC62040-1/CE(EN61000)/ UN38.3/IEC60529 /REACH
16	Environment requirements	REACH

IFpP/73/176/208/[1P/5S]M/-10+50/95
Formula for calculating the rated capacity:
Rated capacity of the measured module: 314Ah
N (Number of modules connected in parallel), a maximum of six modules can be configured (1 Master Module + 5 Battery Modules)):
1~6 Rated capacity (Ah) = 314Ah *N

Download
Manual

E
W

For local customer support, please visit

GR-UM-530-A-00 (PN: 044.0155200)