MIN 2500TL-XH2

MIN 3000TL-XH2

MIN 3600TL-XH2

MIN 4200TL-XH2

MIN 4600TL-XH2

MIN 5000TL-XH2

MIN 6000TL-XH2

Installation & Operation Manual

Contents

1 Information on this document

1.1 Validity
1.2 Target group
1.3 Additional information
1.4 Symbols in this document
1.5 Glossary

2 Safety

2.1 Intended use
2.2 Qualified personnel
2.3 Safety instructions
2.4 Assembly warnings
2.5 Electrical connection warnings
2.6 Operation warnings

3 Product description

3.1 TL-XH2 overview
3.2 Type label
3.3 Dimensions and weight
3.4 Storage of the inverter
3.5 Advantages of the unit

4 Checking before installation

5 Installation

5.1 Safety instructions
5.2 Selecting the installation location
5.3 Mounting the inverter

6 Electrical connections

6.1 Safety precautions
6.2 AC output wiring
6.3 Connecting the second protective conductor
6.4 Connecting the PV array
6.5 Connecting the battery
6.6 Connecting the signal cable
6.7 Grounding the inverter
6.8 Active power control with a smart meter or a ripple control signal receiver
6.9 Connecting the COM port
6.10 Electric arc hazards

7 Commissioning

7.1 Setting initialization parameters
7.2 General settings
7.3 Advanced settings
7.4 Communication interfaces

8 Powering on/off the inverter

8.1 Powering on the inverter
8.2 Powering off the inverter

9 Maintenance

9.1 Checking the heat dissipation
9.2 Cleaning the inverter
9.3 Checking the DC disconnect

10 EU Declaration of conformity

11 Trouble-shooting

11.1 Error messages displayed on OLED
11.2 System faults
11.3 Inverter warnings
11.4 Inverter faults

12 Warranty

13 Decommissioning

13.1 Removing the inverter
13.2 Packing the inverter
13.3 Storing the inverter
13.4 Disposing of the inverter

14 Technical data

14.1 Specifications
14.2 Information on the PV & BAT & AC connectors
14.3 Torque
14.4 Accessories

15 Compliance certificates

16 Connection to the meter

17 Contact

1 Information on this document

1.1 Validity

This document is valid for the following Inverter models:
MIN 2500 TL-XH2
MIN 3000 TL-XH2
MIN 3600 TL-XH2
MIN 4200 TL-XH2
MIN 4600 TL-XH2
MIN 5000 TL-XH2
MIN 6000 TL-XH2

This manual does not cover any details concerning equipment connected to the MIN TL-XH2 (e.g. PV modules). Information concerning the connected equipment can be obtained from the manufacturer of the equipment.

1.2 Target Group

This manual is intended for qualified personnel who have received professional training and have the necessary skills and knowledge in the working principle and operation of this device. Qualified personnel are trained to deal with the potential dangers and risks associated with installing and using electric devices.

1.3 Additional information

Additional information on specific topics can be found in the download area at . Keep the documentation in a convenient place for further reference. shall not be liable for any damage caused by failure to observe the instructions. The information in this document is subject to change without notice.

1.4 Symbols in this document

1.4.1 Warning notes in this document

A warning note denotes a hazard. It calls attention to a procedure which, if not correctly performed or adhered to, could result in damage or destruction of the instrument and personal injury.

Symbol	description
DANGER	DANGER indicates a hazardous situation which, if not avoided, will result in death or serious injury.
WARNING	WARNING indicates a hazardous situation which, if not avoided, could result in death or serious injury.
CAUTION	CAUTION indicates a hazardous situation which, if not avoided, could result in minor or moderate injury.

NOTICE	NOTICE is used to address practices not related to personal injury.
Information	Information that you must read and know to ensure optimal operation of the system.

1.4.2 Markings on this product

Symbol	Explanation
	Risk of electric shock
	Risk of fire
	Risk of burns due to hot surfaces
5min	Delayed discharge: High voltage exists after the device is powered off. It takes 5 minutes to discharge to the safe voltage.
	Grounding: indicates the position for connecting the PE cable
	Direct Current (DC)
	Alternating Current (AC)
	The inverter has no galvanic isolation
	Refer to the manual
CE	CE mark The inverter complies with the requirements of the applicable CE directives
	Do not dispose of the product together with the household waste but in accordance with the disposal regulations for electronic waste applicable at the installation site.

1.5 Glossary

AC
Abbreviation for "Alternating Current"
BAT
Abbreviation for "battery"
DC
Abbreviation for "Direct Current"
Energy
Energy is measured in Wh (watt hours), kWh (kilowatt hours) or MWh (megawatt hours). The energy is the power calculated over time. For example, if the inverter operates at a constant power of 4600 W for half an hour and then at a constant power of 2300 W for another half an hour, it would have generated a total energy output of 3450 Wh in that hour and fed it into the power distribution grid.
Power
Power is measured in W (watts), kW (kilowatts) or MW (megawatts). Power is an instantaneous value. It displays the power that the inverter is currently feeding into the power distribution grid.
Power rate
Power rate is the ratio of current power fed into the power distribution grid and the maximum power of the inverter that can be fed into the power distribution grid.
Power factor
Power factor is the ratio of real power (measured in watts) to apparent power (measured in volt-amperes). When the current and voltage are in phase, the power factor is 1.0. In an AC circuit, the power is not always equal to the direct product of volts and amperes due to reactive components. In order to figure out the real power of a single-phase AC circuit, the product of volts and amperes must be multiplied by the power factor.
PV
Abbreviation for photovoltaic.
Wireless communication
The external wireless communication technology is a radio technology that enables communication between the inverter and other communication products. The external wireless communication does not require line of sight between the devices and it is a selective purchasing option.

2 Safety

2.1 Intended Use

The inverter converts the DC power generated by the PV modules to single-phase and grid-compliant AC power and feeds it to the electricity grid. The MIN 2500TL-XH2, MIN 3000TL-XH2, MIN 3600TL-XH2, MIN 4200TL-XH2, MIN 4600TL-XH2, MIN 5000TL-XH2, MIN 6000TL-XH2 inverters are designed and tested in accordance with international safety requirements. As with all electrical devices, there are residual risks despite careful construction. Improper use and operation may cause personal injury and device damage.
Working principle of a PV plant with the MIN TL-XH2 single-phase inverter

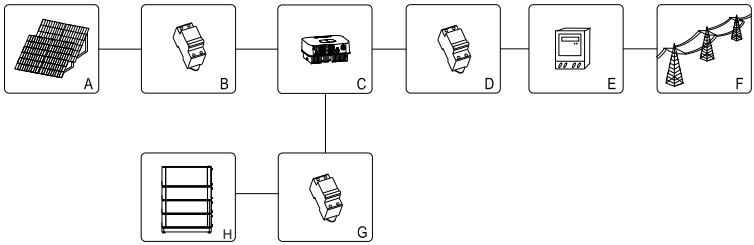

Position	Description
A	PV modules
B*	DC load circuit breaker
C	Inverter
D	AC load circuit breaker
E	Energy meter
F	Utility grid
G	DC load circuit breaker
H	Battery matched with XH(P) inverter

*Choose the DC isolator or the DC load circuit breaker according to local regulations and installation requirements.

The inverter can only be operated with a permanent connection to the public power grid. The inverter is not intended for mobile use. Any use of the product other than that described in the Intended Use section does not qualify as the intended use. The manufacturer/supplier is not liable for damage caused by such unintended use, and the operator should assume all risks associated with it.
PV modules Capacitive Discharge Current
PV modules with a high capacity to ground, such as thin-film PV modules with cells on a metallic substrate, must only be used if their coupling capacity does not exceed 1uF. During feed-in operation, a leakage current flows from the cells to earth, the magnitude of which depends on the installation method (e.g. foil on a metal roof) and weather conditions (e.g., rain or snow). To prevent any damage or harm, the inverter will automatically disconnect from the electricity grid if the leakage current exceeds 50mA.

2.2 Qualified personnel

This inverter system can only work properly when correctly connected to the AC distribution network. Before connecting the MIN TL-XH2 to the power distribution grid, you need to obtain approval from the local utility company. Only qualified and well-trained electrical technicians are allowed to perform the electrical connection.

2.3 Safety instructions

The MIN TL-XH2 Inverters are designed and tested according to international safety requirements (IEC62109-1, CE, VDE-AR-N4105, CEI0-21, VDE0126-1-1, AS4777,etc.). As with all electrical devices, there are residual risks despite careful construction. Read this section carefully and observe all the safety precautions to avoid personal injury and device damage.

2.4 Assembly warnings

WARNING	➢ Before installing the unit, inspect it for any damage occurred during transporting or handling that might affect insulation integrity or safety clearances. Failure to do so may result in safety hazards. ➢ Install the inverter as per the instructions in this manual. Determine the installation position carefully and adhere to specified cooling requirements. ➢ Unauthorized removal of necessary protections, improper use, incorrect installation and operation may lead to serious safety and shock hazards and/or equipment damage. ➢ In order to minimize the potential of a shock hazard due to hazardous voltages, cover the entire solar array with dark material prior to connecting the array to any equipment.
CAUTION	➢ Grounding the PV modules: As the MIN TL-XH2 is a transformerless inverter, it has no galvanic separation. Do not ground the DC circuits of the PV modules connected to the MIN TL-XH2. Only ground the mounting frame of the PV modules. If you connect grounded PV modules to the MIN TL-XH2, it may display an error message "PV ISO Low". ➢ Comply with the local requirements for grounding the PV modules and the PV generator. You are advised to connect the generator frame and other electrically conductive surfaces in a way that ensures continuous conduction with ground, which helps to provide optimal protection for the system and personnel.

2.5 Electrical connection warnings

DANGER	➢ The components in the inverter are live. Touching live components can result in serious injury or death. • This unit must be opened only by qualified service personnel. Only qualified and well-trained personnel can perform installation, maintenance and replacement. • Do not touch damaged inverters. ➢ Caution! The high voltage of the inverter can cause severe personal injury. • After the system powers off, it takes 20 minutes to discharge the residual voltage.

DANGER	➢ Persons with limited physical or mental abilities may only work with the inverter following proper instruction and under constant supervision. Children are forbidden to play with the inverter. Ensure that the inverter is inaccessible to children.
WARNING	➢ All electrical connections, such as connecting conductor terminals, fuses, and PE cables, must be performed in accordance with the prevailing regulations. When performing operations on the inverter while it is powered on, it is important to adhere to all safety regulations to minimize the risk of accidents. ➢ Systems with inverters typically require additional control devices such as switches and disconnects, as well as protective devices like circuit breakers and fuses. The specific type of control and protective devices needed will depend on the relevant safety regulations in effect.

2.6 Operation warnings

WARNING	➢ Ensure all connectors are properly sealed and secured during operation. ➢ Burn warning. Some parts and surfaces of the inverter are extremely hot during operation. For safety reasons, avoid contact with the heat sink at the back of the PV Inverter or nearby surfaces while the inverter is operating. ➢ Incorrect sizing of the PV plant may result in high DC voltages that could damage the inverter. In such cases, the inverter display will show the error message "PV voltage High!" • Turn the rotary switch of the DC disconnect to the Off position immediately. • Contact the installation personnel.
CAUTION	➢ All operations regarding transportation, installation, start-up and maintenance must be performed by qualified and well- trained personnel, and in compliance with all prevailing codes and regulations. ➢ After the system powers off, take great caution as the remaining charge may still cause electrical shocks; to minimize the risk of accidents and damage, follow all safety symbols and markings on the unit and in this manual. ➢ Although standardized emission limit values are in place to minimize interference, certain situations may still result in interference for the specified application area. This can happen when sensitive equipment is located near the setup location, or when the setup location is near radio or television receivers. In these cases, the operator should take appropriate measures to resolve the issue. ➢ Keep a safe distance of at least 20cm from the inverter at all times.

3 Product description

3.1 TL-XH2 overview

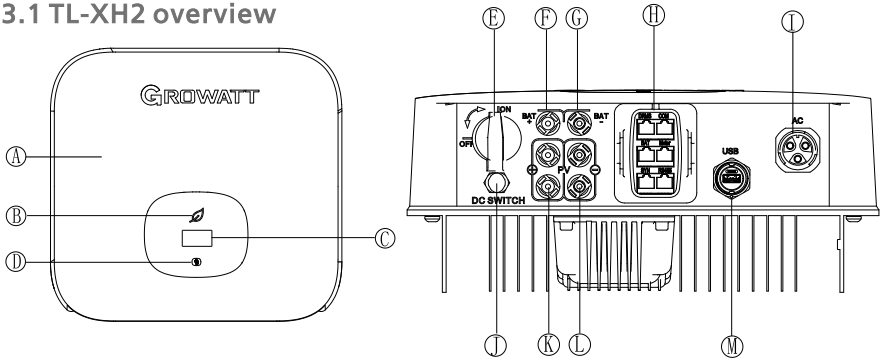

Position	Description	Position	Description
A	Cover	H	RJ45 ports
B	LED	I	AC output
C	OLED	J	Ventilation valve
D	Touch button	K	PV input +
E*	DC switch	L	PV input -
F	Battery input+	M	USB port
G	Battery input-		

*The DC switch is not available for some Australian and UK models.

Symbol on the inverter

Symbol	Description	Explanation		
	Touch button	You can view different options the OLED display and set the parameter by tapping the button.		
	Inverter status symbol	Inverter status	LED color	LED status
		Standby	Green	0.5s on and 2s off
		Normal	Green	Steady
		Fault	Red	Steady
		Warning	Green	0.5s on,0.5s off,0.5s on,2S off
		Programming	Yellow	1s on and 1s off

3.2 Type label

The type label provides a unique identification of the inverter (The type of product, Device-specific characteristics, Certificates and approvals). It can be found on the left side of the enclosure.

Hybrid Inverter
MIN 5000TL-XH2

PV Data

Max. PV voltage	600 d.c.V
PV voltage range	40-550 d.c.V
PV Isc	24 d.c.A*2
Max. input current	16 d.c.A*2

DC Data

Max. DC voltage	550 d.c.V
DC voltage range	360-550 d.c.V
Max. DC current	17 d.c.A

AC Data

Rated input/output power	5000/5000 W
Rated apparent power	5000 VA
Nominal output voltage	230 a.c.V
Rated input/output current	22.7/22.7 a.c.A
Nominal output frequency	50/60 Hz
Power factor range	0.8 leading~0.8 lagging

General Data

Overvoltage category	PV:II BAT:II AC:III Others:I
Safety level	Class I
Ingress protection	IP66
Operation ambient temperature	-30℃ ~ +60℃
Inverter topology	Non-isolated
Certificate number	EESS-230870-0

QC PASS

Download Manual

Made in China

More details are shown in the chart below:

Model Name	MIN 2500 TL-XH2	MIN 3000 TL-XH2	MIN 3600 TL-XH2
Max input PV voltage	500V	500V	550V(600V AU)
Max input PV current	16A/16A		
Startup voltage	50V		
MPP voltage range	40~550V	40~550V	40~550V
DC nominal input voltage	400V		
DC input voltage range	360~500V	360~500V	360~550V
DC Max input/output current	17A		
AC nominal voltage	230V		
AC grid frequency	50/60 Hz		
Max. apparent power	2500VA	3000VA	3600VA
Max AC output current	11.3A	13.6A	16A
Power factor	0.8leading…0.8lagging		
Environmental Protection Rating	Ip66		
Operating Ambient temperature	−30…+60°C (-22…+ 140°F) derating occurs above 45°C (113°F)		

Model Name	MIN 4200 TL-XH2	MIN 4600 TL-XH2	MIN 5000 TL-XH2	MIN 6000 TL-XH2
Max input PV voltage	550V(600V for AU)			
Max input PV current	16A/16A			
Start voltage	50V			
MPP voltage range	40~550V			
DC nominal input voltage	400V			
DC input voltage range	360~550V			
DC Max input/output current	17A			
AC nominal voltage	230V			
AC grid frequency	50/60 Hz			
Max. apparent power	4200VA	4600VA	5000VA	6000VA
Max AC output current	19A	20.9A	22.7A	27.2A
Power factor	0.8leading…0.8lagging			
Environmental Protection Rating	IP66			
Operation Ambient temperature	−30…+60℃ (-22…+ 140°F) derating occurs above 45°C (113°F)			

3.3 Dimensions and weight

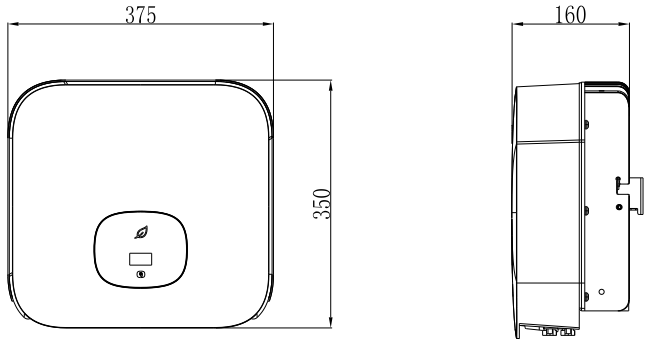

Dimensions and weight

Model	Height (H)	Width (W)	Depth (D)	Weight
MIN 2500-6000 TL-XH2	350mm 13.8inch	375mm 14.8inch	160mm 6.3inch	10.8kg

3.4 Storage of the inverter

If you want to store the inverter in your warehouse, you should choose an appropriate location.

- Put the inverter in the original package. The inverter should be stored in a clean and dry place and be protected from dust and moisture penetration.
- Keep the storage temperature between -25℃and +60℃ with a relative humidity up to 100%.
- If storing multiple inverters, a maximum of four cartons can be stacked.
- After long-term storage, a local installer or personnel of the service department should perform a comprehensive test before installation.

3.5 Advantages of the unit

- Max. efficiency of 98.4%
- Dual MPP trackers
- Type II SPD on the DC side
- 30% lighter weight
- Storage-ready design
- AFCI function (optional)
- Compatible with double-glass bifacial modules

4 Checking before installation

Before delivery, every inverter undergoes rigorous testing and inspection to ensure proper electrical and mechanical functioning. Despite our best efforts to ensure safe transportation, it is still possible for transport damage to occur. In such cases, the responsibility falls on the shipping company. Inspect the inverter and the package thoroughly and immediately notify the responsible shipping company if any damage is found. We are available to provide assistance if needed. When transporting the inverter, it is recommended to use the original or equivalent packaging and not to stack more than four cartons for safe transportation.

After unpacking the inverter, check that the contents are intact and complete. The package should contain the inverter and the accessories listed below. Please check all of the accessories in the carton carefully. If anything is missing, contact your dealer immediately.

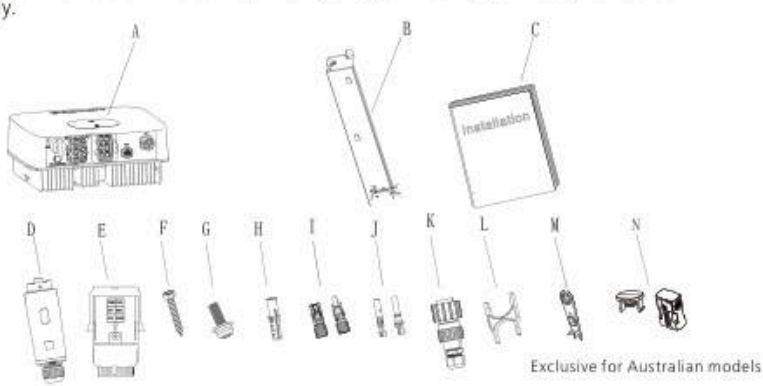

Object	Description	Quantity
A	Inverter	1
B	Mounting bracket	1
C	Quick Guide	1
D	Data logger (Optional)	1
E	RJ45 Port Cover	1
F	Self-tapping screw	3
G	Cross pan head screw with flat washer and spring washer	1
H	Plastic expansion pipe	3
I	PV+/PV- connector	2/2
J	PV+/PV-metal contact	2/2
K	AC connector	1
L	Signal or AC connector removal tool	1
M	PV or Battery terminal removal tool	1
N	Waterproof and anti-disassembly sealing plug for AU	3/3

5.1 Safety instructions

	Danger to life due to fire or explosion ➢ Despite careful construction, electrical devices can cause fires. ➢ Do not install the inverter in areas containing highly flammable materials or gases.
	Risk of burns due to hot enclosure parts Mount the inverter in a way that prevents accidental contact.
	Exposure to radiation can cause damage to health. ➢ Despite adhering to standardized emission limit values, interference may occur in certain application areas, particularly when sensitive equipment is located nearby. In such cases, operators must take proper action to address the situation. ➢ Never install the inverter near the sensitive equipment (e.g. radios, telephones, televisions) ➢ Keep a distance of at least 20 cm from the inverter at all time. ➢ assumes no responsibility for compliance to EMC regulations for the entire system.

- ➢ All electrical installations must comply with the local and national electrical codes. Do not remove the casing of the inverter. The inverter contains no user-serviceable parts. Repairs or testing under power must only be performed by qualified service personnel.
- ➢ Handle the unit with care while unpacking it and check for any external damage. If any damage is found, contact your local dealer.
- ➢ Ensure that the inverters are properly grounded to avoid property damage and personal injury.
- ➢ The inverter must only be operated with the PV generator. Do not connect any other source of energy to it.
- ➢ Disconnect the AC and DC voltage sources inside the PV inverter before performing any maintenance or servicing of the equipment.
- ➢ This unit is designed to feed power to the public power grid (utility) only. Do not connect this unit to an AC source or generator, which could result in serious damage to your equipment.
- ➢ The photovoltaic panel generates DC voltage when exposed to light, which is then used to charge the DC link capacitors when connected to this equipment.
- ➢ The energy stored in the DC link capacitors of this equipment poses a risk of electric shock. High voltages may still exist inside the PV inverter even after the unit is disconnected from the grid and photovoltaic panels. For safety reasons, do not remove the casing until at least 5 minutes after disconnecting all power sources.
- ➢ Although designed to meet all safety requirements, some parts and surfaces of the inverter can become extremely hot during operation. For safety reasons, avoid contact with the heat sinks at the back of the PV Inverter or nearby surfaces while the inverter is operating.

5.2 Selecting the installation location

- This section provides guidance for determining a proper installation position to avoid device damage and personal injury.
- Select an installation position that is suitable for the weight and dimensions of the inverter.
- Install the inverter in an appropriate place for the user's ease to view and operate on the display.
- Do not install the inverter in areas with flammable or thermo-sensitive materials.
- The inverter generates high temperature on the enclosure during operation, so please install it in a location that is inaccessible to children (non-children's play areas).
- Install the inverter in a well-ventilated place and keep it free from dust.
- The inverter is protected to IP66 and can be installed indoors and outdoors.
- The humidity of the installation location should be 0~100% without condensation.
- Select a position that permits easy access for later maintenance or repair.
- Install the inverter vertically or at a maximum back tilt of 15 degrees. Do not install the inverter at a front tilt, side tilt, horizontally, or upside down.

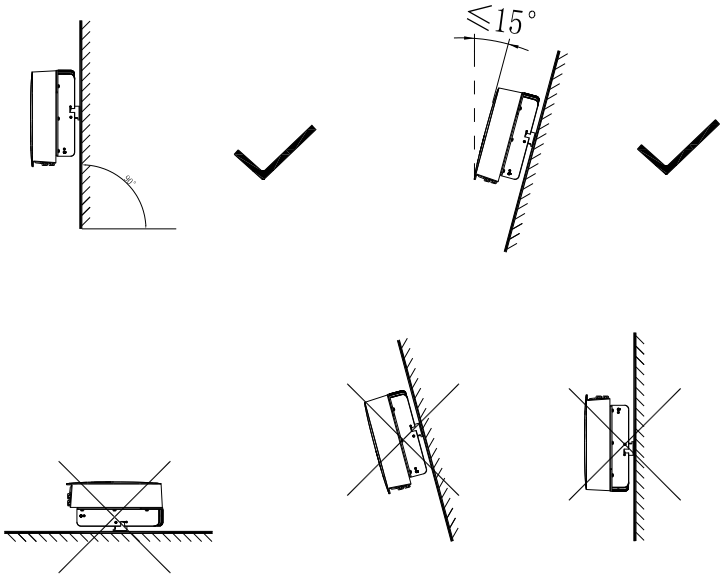

- Ensure that the inverter is not accessible to children.
- Don't put any things on the inverter. Do not cover the inverter.
- Do not install the inverter near television antenna or any other antennas and antenna cables.
- Install the inverter in a well-ventilated place to ensure heat dissipation and keep the ambient temperature below 40°C to achieve optimal performance.
- Do not expose the inverter to direct sunlight, as performance de-rate may be initiated due to additional temperature rise.
- Reserve enough clearances around the inverter as shown below:

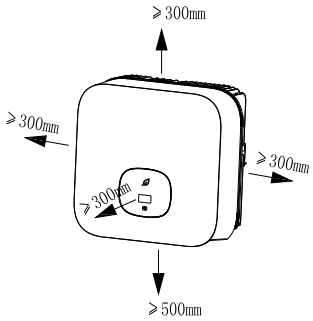

Recommended clearances for one inverter

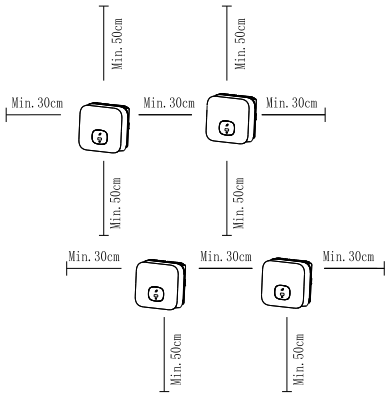

Recommended clearances for multiple inverters

- Ensure that there is enough space between each inverter to prevent the cooling air of the neighboring inverter from being drawn in.
- If necessary, increase the clearances between the inverters and ensure sufficient fresh air supply to guarantee optimal cooling of the inverters.

Protect the inverter against direct sunlight, rain and snow. Install the inverter in a sheltered place or install an awning over the inverter.

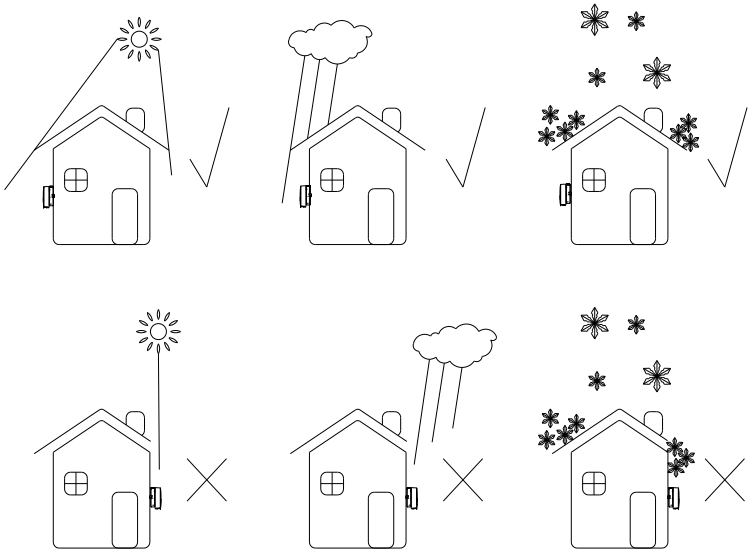

➢ Do not install the inverter in a sealed enclosure.

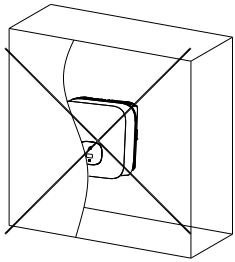

5.3 Mounting the inverter

5.3.1 Mounting the inverter with a bracket

DANGER	For safety reasons, avoid the water pipes and power cable buried in the wall when drilling holes.

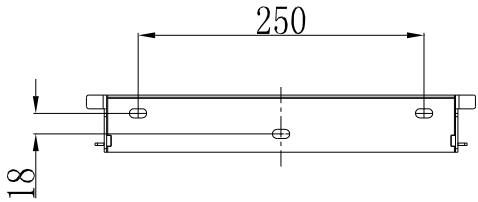

- Fix the mounting bracket as the figure shows. The screws are not inserted flush to the wall. Instead, leave 2 to 4mm of the screws exposed.

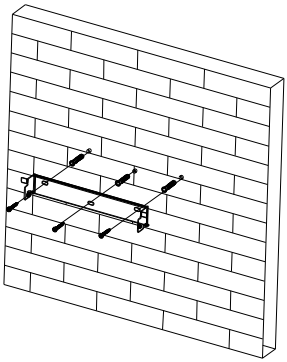

5.3.2 Fix the inverter on the wall

WARNING	To prevent personal injury caused by a falling inverter, ensure that the bracket is securely installed before mounting the inverter onto the mounting bracket.

- Lift the inverter slightly above the bracket. Keep balance when moving the inverter to prevent any damage or injury due to the weight of the inverter.

  Hook the inverter into the wall mounting bracket.

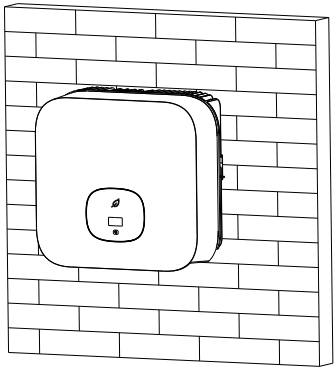

- After confirming the inverter is installed correctly, tighten the M6 socket head cap screws on both sides to prevent the inverter from falling.

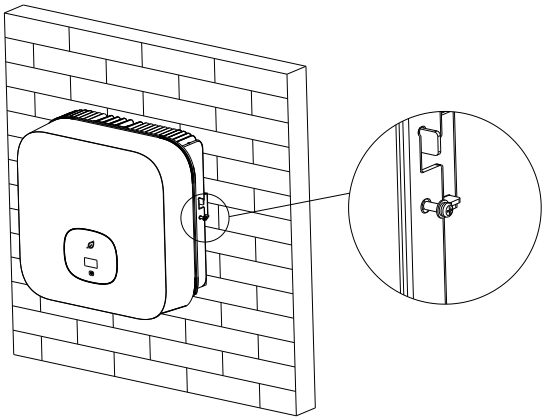

6 Electrical connections

Decisive Voltage Class (DVC) indicated for ports

Port Name	Class
AC Output	C
DC Input	C
RJ45 Ports	A
USB	A

6.1 Safety precautions

	Danger to life due to high voltages! High voltages which may cause electric shocks are present in the conductive parts of the inverter. Prior to performing any work on the inverter, disconnect the inverter from voltage sources.
WARNING	Danger of damaging electronic components due to electrostatic discharge. Take appropriate ESD precautions when replacing and installing the inverter.

6.2 AC output wiring

WARNING	➢ You must install a separate single-phase circuit-breaker or other load disconnection unit for each inverter in order to ensure that the inverter can be safely disconnected under load. NOTE : The inverter has the function of detecting residual current and protecting the inverter against residual current. If an external RCD breaker is mandatory in the country of installation,you must choose a Type A RCD breaker with a rating residual current of no less 300mA.

For the AC breaker rating current, please refer to the table below:

MIN 2500TL-XH2	16A/230V
MIN 3000TL-XH2	16A/230V
MIN 3600TL-XH2	20A/230V
MIN 4200TL-XH2	25A/230V
MIN 4600TL-XH2	25A/230V
MIN 5000TL-XH2	32A/230V
MIN 6000TL-XH2	32A/230V

AC wiring steps:

1.Disassemble the parts of the AC connector from the accessory bag.

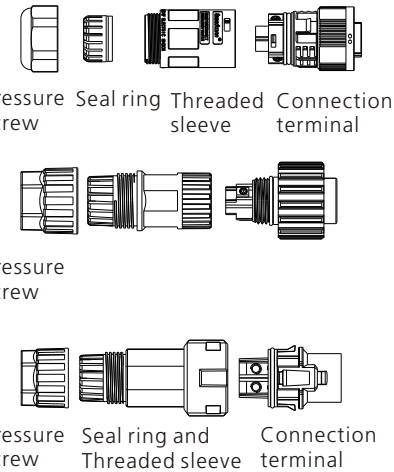

2.Route the exposed core wires through the pressure screw, seal ring and the threaded sleeve in sequence. Insert the cables into the connection terminals and ensure the correct polarity. Pull the cable back to ensure that it is securely connected.

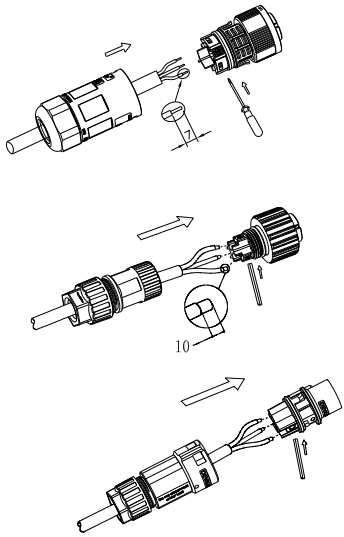

3.Push the threaded sleeve into the socket. Tighten the cap on the terminal.

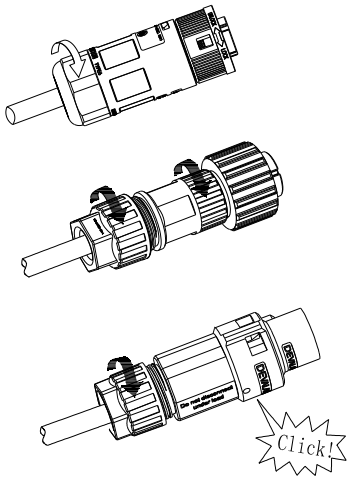

4.Finally, push or screw the threaded sleeve into connection terminal until both are locked tightly on the inverter.

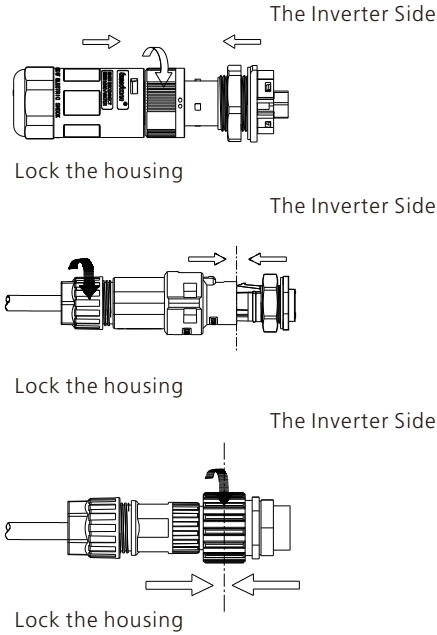

5. To remove the AC connector, press the bayonet out of the slot with a small screwdriver and pull it out, or unscrew the threaded sleeve, then pull it out.

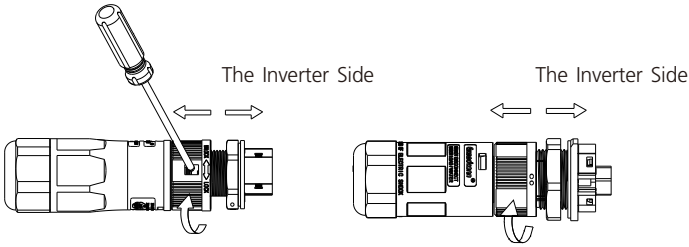

Unlock the housing

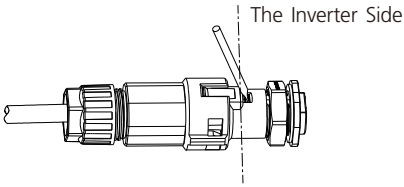

Unlock the housing

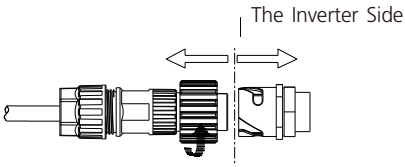

Unlock the housing

Recommended cable specifications

Conductor cross-sectional area	Max. cable length		
	MIN 2500 TL-XH2	MIN 3000 TL-XH2	MIN 3600 TL-XH2
4 mm² 12AWG	48m	40m	33m
5.2 mm² 10AWG	60m	50m	42m
Conductor cross-sectional area	Max. cable length		
	MIN 4200 TL-XH2 MIN 4600 TL-XH2	MIN 5000 TL-XH2	MIN 6000 TL-XH2
5.2 mm² 10AWG	28m	26m	24m

6.3 Connecting the second protective conductor

In some installation countries, a second protective conductor is required to prevent a touch current in the event of a malfunction in the original protective conductor. For installation countries falling within the scope of validity of the IEC standard 62109, you must install the protective conductor on the AC terminal with a conductor cross-section of at least 10 mm²Cu. Alternatively you can install a second protective conductor on the earth terminal with the same cross-section as the original protective conductor on the AC terminal. This prevents a touch current in the event of a malfunction in the original protective conductor.

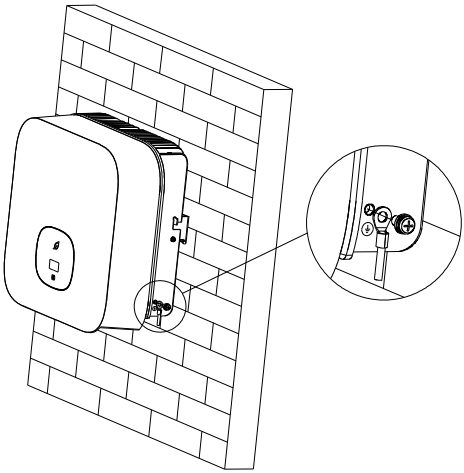

6.4 Connecting to the PV array

6.4.1 PV connectors

The MIN TL-XH2 single-phase inverter has 2 independent PV inputs : PV1 & PV2.
Notice that the connectors are paired (male and female connectors). The connectors for PV arrays and inverters are Helios H4-R/VP-D4 connectors.

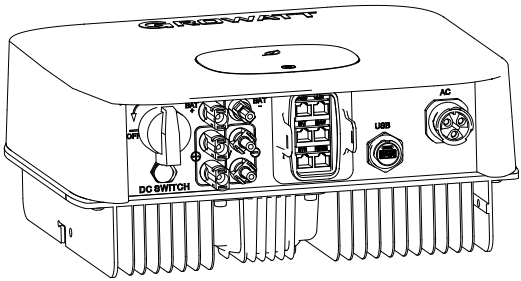

CAUTION

If the inverter is not equipped with a DC switch but this is mandatory in the country of installation, install an external DC switch.
The following limit values at the DC input of the inverter must not be exceeded:

Types	Max current PV1	Max current PV2	Max voltage
2500-3000 TL-XH2	16A	16A	500V
3600-6000 TL-XH2	16A	16A	550V

It is suggested to connect eleven PV modules with an IEC 61730 Class A rating in series as a single PV input.

6.4.2 Connecting to the PV array

DANGER

Danger to life due to lethal voltages!
Danger to life due to high voltages!
Before connecting the PV array, ensure that the DC switch and AC breaker are disconnected from the inverter. NEVER connect or disconnect the PV connectors under load.
Make sure the maximum open-circuit voltage(Voc) of each PV string is lower than the maximum input voltage of the inverter.
Check the design of the PV plant. The Max. open circuit voltage, which may occur when the temperature of the solar panel is -10℃, must not exceed the Max. input voltage of the inverter.

WARNING

Improper operation during the wiring process can cause fatal injury to the operator or unrecoverable damage to the inverter. Only qualified personnel can perform the wiring work.
Do not connect the PV array positive or negative pole to the ground, which may cause serious damage to the inverter
Check the connection cables of the PV modules for correct polarity and make sure that the maximum input voltage of the inverter is not exceeded.

Connection of PV terminals

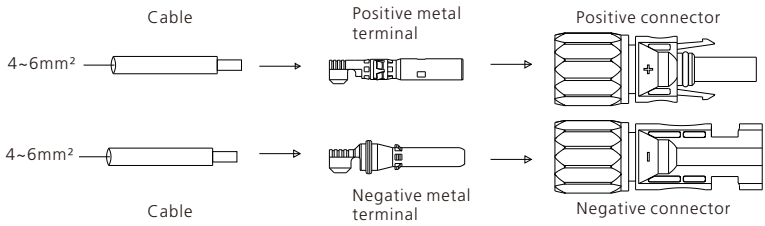

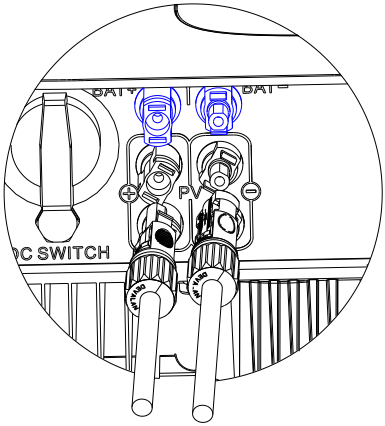

6.5 Connecting to the battery

6.5.1 Battery connectors

The MIN TL-XH2 single-phase inverter features one independent battery input:
BAT+/BAT- connecting to the output of the battery.
Notice that the connectors are paired (male and female connectors). The connectors for the battery and inverters are Helios H4-R/VP-D4connectors.

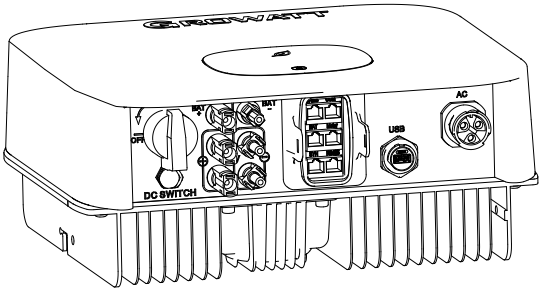

6.5.2 Connecting to the battery

DANGER	**Danger to life due to high voltages!** Before connecting to the battery, make sure to disconnect all power supplies. Do not reversely connect the positive and negative terminals.
WARNING	Improper operation during the wiring process can cause fatal injury to the operator or unrecoverable damage to the inverter. Only qualified personnel can perform the wiring work.

Connection of BAT input terminals

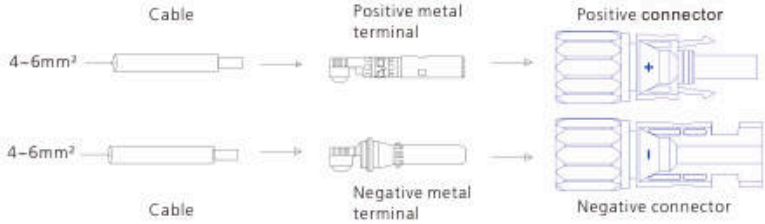

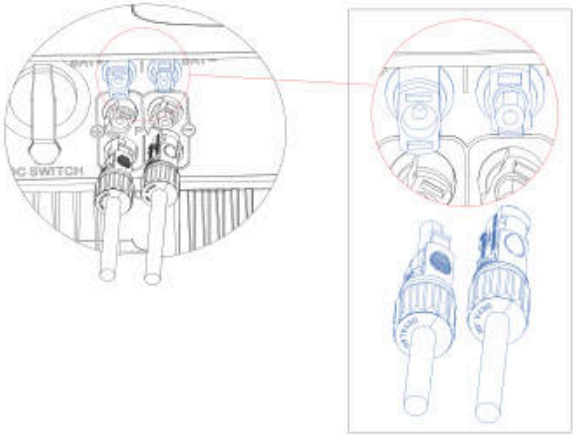

6.5.3 Connecting to the battery pack

The XH2 series inverters can be connected to the lithium-ion battery pack, which comes equipped with its own battery management system. The bidirectional DC/DC box can be connected to the battery pack through either an RS485 or CAN interface. For inverters in this series, the DC-DC box is connected via RS485. Additionally, the XH2 series inverters feature a pair of signals that can be used to wake up the battery.

BAT Port RJ45 Definitions				
NO.	Color	Port	Definition	RJ45 assignments front view
1	Orange &White	Enable-	Connects to the negative signal port of the battery	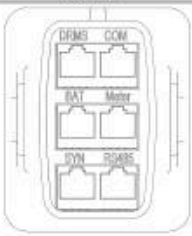
2	Orange	Enable+	Connects to the positive signal port of the battery	
7	Brown& White	BAT_B	Connects to the RS485B or CANL port of the battery	
8	Brown	BAT_A	Connects to the RS485A or CANH port of the battery	

CAUTION	Improper connection or disconnection of the RS485 or CAN communication interface between the inverter and the lithium-ion battery pack can result in equipment malfunction or damage.

6.6 Connecting the signal cable

The inverter of this series has six RJ45 ports.The signal ports are follows:

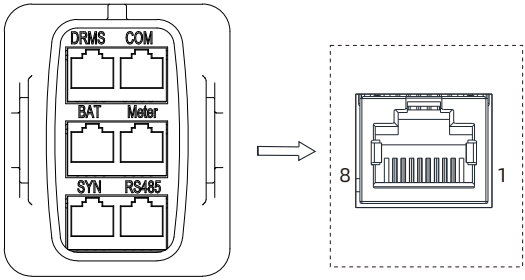

Procedure

Pass the network cables that needs to be connected through the waterproof cover and threaded sleeve, and insert them into the corresponding ports.

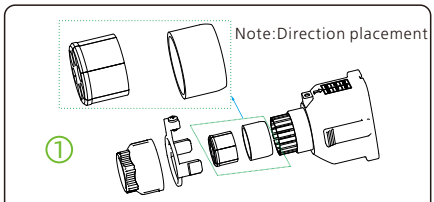

1.Arrange the parts in this order

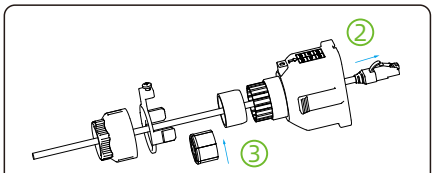

2.Pass the RJ45 cable through each part in sequence as shown in the diagram.
3.Snap the wire into the rubber ring correspondingly.

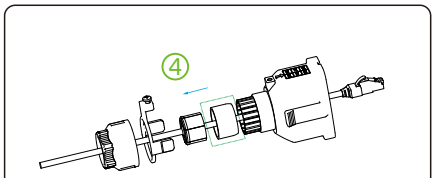

4.Assemble the rubber ring sleeve with the rubber ring as shown in the illustration.

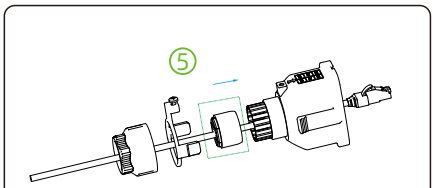

5.Insert the rubber ring assembly into the corresponding holes of the protective cover as shown in the figure.

Step 2 Tighten the screw of the waterproof cover and the cap on the terminal.

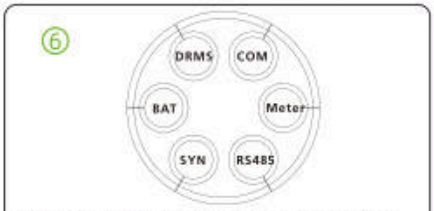

6.Place the rubber ring in the position shown in the diagram, thread the RJ45 cables through in sequence according to the position shown in the diagram.

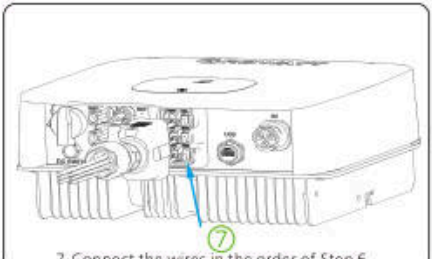

7.Connect the wires in the order of Step 6

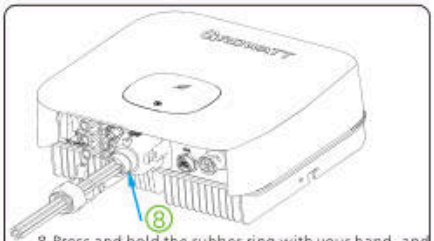

8.Press and hold the rubber ring with your hand, and straighten out the excess wire length.

9.When the number of installed wires is less than 6, use sealing plugs to block the vacant holes.

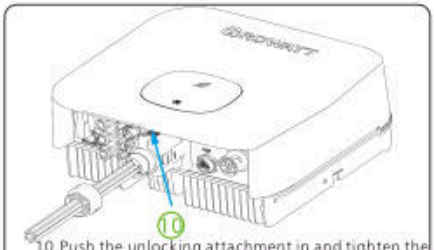

10.Push the unlocking attachment in and tighten the screw.

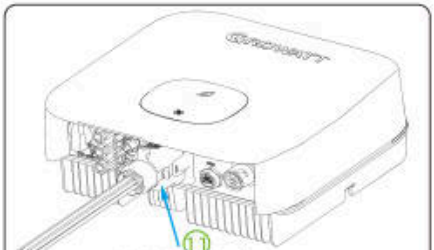

11.Lock the plastic part nut.

6.7 Grounding the inverter

The inverter must be connected to the AC grounding conductor of the power distribution grid via the ground terminal (PE) .

WARNING	Due to the transformerless design, it is not allowed to ground the DC positive and negative poles of the PV array.

6.8 Active power control with a smart meter or a ripple control signal receiver

Information	The export limitation meter must be installed between the inverter and the load/grid. Multiple inverter combination is not suitable in Australia. The maximum operating altitude of the smart meter is 2000m.

Inverters in this series support output control and export limitation functions. The output control function allows for control of the active or apparent power output of the inverter, while the export limitation function is used to regulate the export power level from the inverter to the grid. To enable these functions, a smart meter should be connected, with the recommended model being the Eastron SDM120CT-M (40mA). The primary aperture size is 10mm and the output cable length is 5m. The arrow on the CT should be pointing towards the inverter. For more detailed information about the meter, please refer to the Annex - Eastron SDM120CT-M (40mA) user manual, and Section 16 for connection modes.

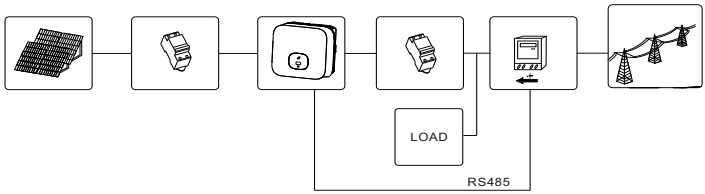

Active power control with a Radio Ripple Control Receiver(RRCR).

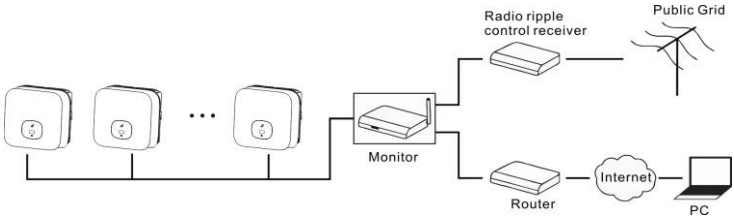

Manufacturer	Eastron
Type	SDM120CT-M(40mA)

General Specifications

Voltage AC (Un) Voltage Range Base Current (Ib) Power consumption	230V 176~276V AC 0.1V AC <2W/10VA
Frequency	50/ 60Hz(±10%)
AC voltage withstand	4KV for 1 minute
Impulse voltage withstand	6KV-1.2uS waveform
Overcurrent withstand	20Imax for 0.5s
Pulse output 1	1000imp/kWh (default)
Pulse output 2	0.001(default) /0.01/0.1/1 kWh/kVArh (configurable)
Display Max. Reading	LCD with white backlit 999999kWh

Environment

Operating temperature	-25℃ to +55℃
Storage and transportation temperature	-40℃ to +70℃
Reference temperature	23℃± 2℃
Relative humidity	0 to 95%, non-condensing
Altitude	up to 2000m
Warm up time	3s
Installation category	CAT II
Mechanical environment	M1
Electromagnetic environment	E2
Degree of pollution	2

Mechanics

Din rail dimensions	18x118x64 (WxHxD) DIN 43880
Mounting	DIN rail 35mm
Ingress protection	IP51 (indoor)
Material	self-extinguishing UL94V-0

The following table illustrates the connection between the EASTRON meter (SDM120CT(40 mA) and the inverter:

Meter Pin NO.	Description	Meter Connection
1	CT-input	CT-P(White)
2		CT-N(Black or Blue)
3	N-in	Grid N
4	L-in	Grid L
9	RS485B	RS485B2 connects to Meter port of the inverter
10	RS485A	RS485A2 connects to Meter port of the inverter

6.9 Connecting the DRMS port

This series inverters come with a RJ45 ethernet port , which supports the function of demand response modes. For Australian models, the DRMS RJ45 port can be used as an inverter DRED connection. For European models, it can be used as a Power Control Interface (PCI).

6.9.1 Inverter demand response modes-DRMs(Australia only)

This series inverter supports the function of demand response modes,and the 8-pin COM port can be used as an inverter DRED connection.Use external tools to short-circuit the corresponding ports to control the power output.The following details the connection method of DRM connection.

Information	DRMs application description ➢ Only applicable to AS/NZS4777.2 ➢ DRM0, DRM1, DRM2, DRM3, DRM4, DRM5, DRM6,DRM7, DRM8 are available.
CAUTION	Damage to the inverter due to moisture and dust penetration ➢ Make sure the cable gland has been tightened firmly. ➢ If the cable gland is not mounted properly, the inverter can be destroyed due to moisture and dust penetration. All the warranty claim will be invalid.

6.9.1.1 The RJ45 ports of DRMS and COM assignment

Pin	Color	DRMS port assignment
1	Orange&White	DRM 1/5
2	Orange	DRM 2/6
3	Green&White	DRM 3/7
4	Blue	DRM 4/8
5	Blue&White	RefGen
6	Green	Com/DRM0
Pin	**Color**	**COM port assignment**
1	Orange&White	12V
2	Orange	GND

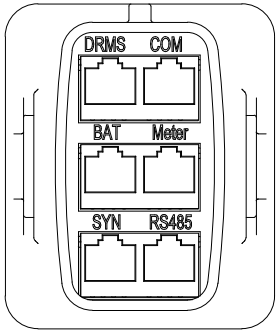

6.9.1.2 DRM requirements

Mode	Socket Asserted by shorting pins		Requirements
DRM 0	5	6	Operate the disconnection device
DRM 1	1	6	Do not consume active power
DRM 2	2	6	Do not consume more than 50% of the rated power
DRM 3	3	6	Do not consume more than 75% of the rated power
DRM 4	4	6	Increase active power consumption
DRM 5	1	5	Do not output active power
DRM 6	2	5	The output active power of the inverters does not exceed 50% of the rated power.
DRM 7	3	5	The output active power of the inverters does not exceed
DRM 8	4	5	Increase active power generation (subject to constraints from other active DRMs)

6.9.2 Inverter demand response modes-Power Control Interface(PCI) for EU

This series inverter supports demand response modes, and the DRMS RJ45 port can be used as the Power Control Interface(PCI) for European models

WARNING	Excessive voltage can damage the inverter! The external voltage applied to the PCI port must not exceed +5V.

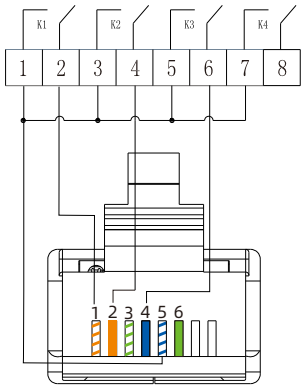

DRMS/PCI Connector

6.9.2.1 The connector pin assignment and function definition

Pin	Description	Connect to RRCR
1	Relay contact 1 input	K1 – Relay 1 output
2	Relay contact 2 input	K2 – Relay 1 output
3	Relay contact 3 input	K3 – Relay 1 output
4	Relay contact 4 input	K4 – Relay 1 output
5	GND	Relays common node
6	Not connected	Not connected

6.9.2.2 The inverter is preconfigured to the following RRCR power levels

PCI Connector(DRMS PORT)				Active power	Cos(φ)
Pin 1	Pin 2	Pin 3	Pin 4		
Short circuit with Pin5				0%	1
	Short circuit with Pin5			30%	1
		Short circuit with Pin5		60%	1
			Short circuit with Pin5	100%	1

Active power control and reactive power control are enabled separately

6.10 Electric arc hazards

6.10.1 Arc-Fault Circuit Interrupter(AFCI)

In accordance with Article 690.11 of the National Electrical Code (R), the inverter is equipped with a system that can detect and interrupt electric arcs. The AFCI function is designed to interrupt any electric arc with a power of 300W or greater within a specified time outlined by UL 1699B. If the AFCI is tripped, it can only be reset manually. If you do not require the AFCI function, you can disable it via a communication product in the Installer mode. Additionally, the 2011 edition of the National Electrical Code (R), Section 690.11 mandates that PV systems installed on or penetrating a building or structure shall be provided with arc-fault circuit protection (AFCI) on the PV side.

6.10.2 Danger information

	Danger of fire from electric arc Only test the AFCI for false tripping in the order described below. Do not deactivate the AFCI permanently.

The inverter is equipped with dual MPPTs and it is recommended that each MPPT operates independently. Parallel wiring on the DC side should be avoided as it may cause the two MPPTs to function as a single MPPT, leading to decreased efficiency in some cases. If the MPPTs are parallel-wired within the inverter, an AFCI (Arc Fault Circuit Interrupter) may be mistakenly triggered.
When an "Error 200" message is displayed, the LED indicator is steady red and the buzzer alarms, an electric arc has occurred in the PV system. As a safety measure, the AFCI has tripped and the inverter is in the permanent shutdown mode.
Be aware of the large electrical potential differences between the conductors, which can cause the risk of arc flashes through the air when high-voltage current flows. Do not work on the product during operation. If the inverter displays an "Error 200" message, follow the steps below:

6.10.3 Operating steps

For models with DC switches, when the inverter displays an error 200 message, please follow these steps:
Step 1: Disconnect all power supply connections to the inverter. Turn off the battery input switch; turn off the inverter's AC output breaker; turn the inverter's PV input DC switch to the position "OFF", and wait until the error message disappears;

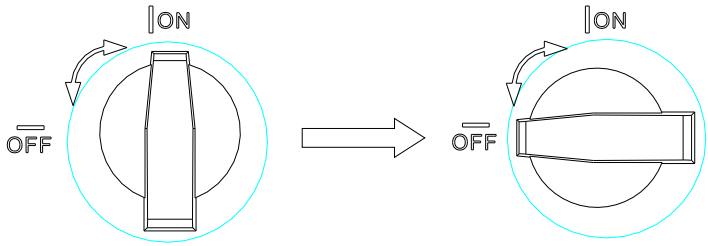

Step 2: Perform troubleshooting on the system. Check all PV strings for the correct open-circuit voltage;
Step 3: After the fault is rectified, restart the inverter. Turn on the battery input switch; turn on the inverter's AC output breaker, turn the inverter's PV input DC switch to the position "ON", and wait until the system works properly;

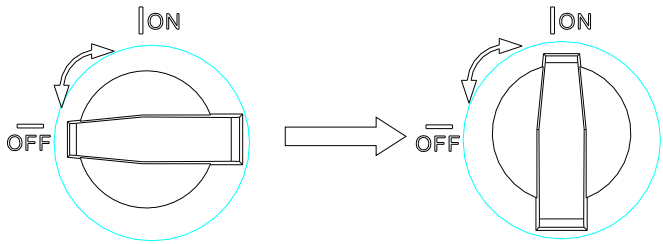

If the AFCI self-test is successful, the inverter will operate in the normal mode and the LED indicator is steady green.
If the AFCI self-test fails, the inverter will display the message "Error 425". In this case, please restart the system and repeat step 1 to step 3. If the AFCI self-test continues to fail, disconnect all power supply connections to the inverter and contact for assistance.

6.11 Additional information

Earth Fault Alarm

The inverter is designed to comply with AS/NZS 5033 standards and supports the Earth Fault Alarm function that is enabled by default, so no additional configuration is required. If an earth fault occurs, the Red LED will illuminate and the buzzer will buzz continuously until the fault is rectified. This function is only available for Australian and New Zealand models.

DANGER	Do not disconnect the PV&BAT connectors under load.
WARNING	Improper operation during the wiring process can cause fatal injury to the operator or unrecoverable damage to the inverter. Only qualified personnel can perform the wiring work.
CAUTION	Damage to the inverter due to moisture and dust penetration ➢ Make sure the cable gland has been tightened firmly. ➢ If the cable glands are not mounted properly, the inverter can be damaged due to moisture and dust penetration, which will void the warranty claims

Requirements:

✓ The AC cable is correctly connected.
✓ The PV&BAT connectors are correctly connected.
✓ The country is set correctly.

7.1 Setting initialization parameters

7.1.1 Touch control

Touch button	Description
Single tap	Switch the displayed information or increase the value
Double tap	Enter or confirm
Triple tap	Return to the previous menu
Long press (5s)	Confirm the Country/Region Setting or restore to the default value

7.1.2 Setting the country/area and the region

Information	Country/Area and Region setting ➢ When the inverter is powered on, you need to select the correct country. If no country is selected, the inverter will default to AS/NZS4777.2 for Australia, or VDE0126-1-1 for other regions after 30 seconds.

When the inverter is powered on, the OLED display will light up automatically. Once there is sufficient PV power, the OLED screen shows:

Tapping the button to view the list of countries. The country displayed on the screen will update with each single tap. For instance, to select New Zealand from the list, tap the button until the OLED display shows "New Zealand".

Press and hold the button for 5s, the OLED scree will show that the Country setting is completed.

Once the Country setting is completed, proceed to set the region as outlined below:

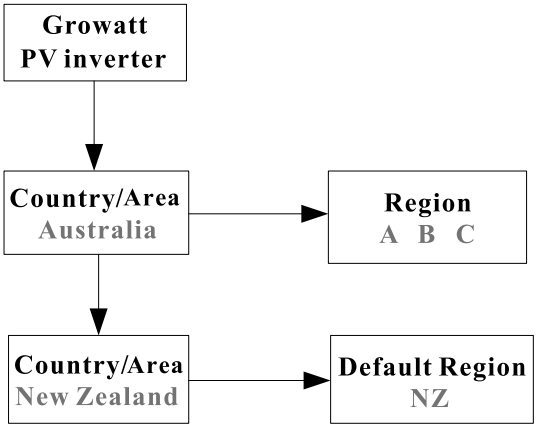

When choosing Australia as the country, users can select Region A, B, or C. If New Zealand is selected, the default region will be set to NZ.
If Region A is chosen, the inverter will load all Region A values for power quality response modes and grid protection settings.

7.1.3 Enabling/Disabling Power Quality Response Modes（PQRM）

Information	PQRM setting ➢ When the region setting is completed, the inverter will operate according to the default mode, which may differ from the region setting.

MIN TL-XH2 includes five types of Power Quality Response Modes:
Volt-Var, Volt-watt, Fixed PF, Reactive power, Power limit. If you want to change the PQRM setting, please refer to chapter 7.3.1.

7.1.4 Checking the firmware version, country/area and region settings and PQRM settings

Single tap to switch the displayed information.
Double tap to enter the sub-menu.

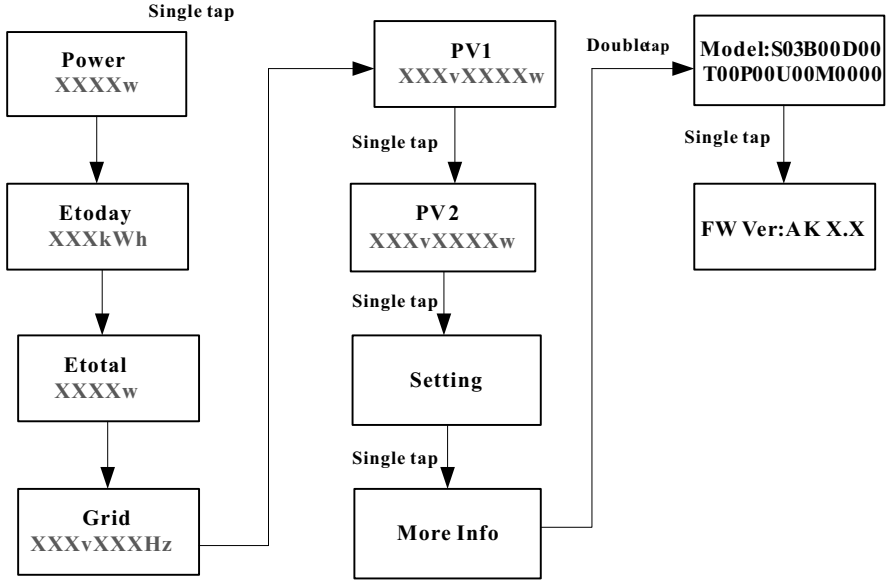

7.2 General settings

7.2.1 Setting the display language

Inverters in this series offer multiple language options. Single tap to select the language. Double tap to confirm the setting. Set the language as described below:

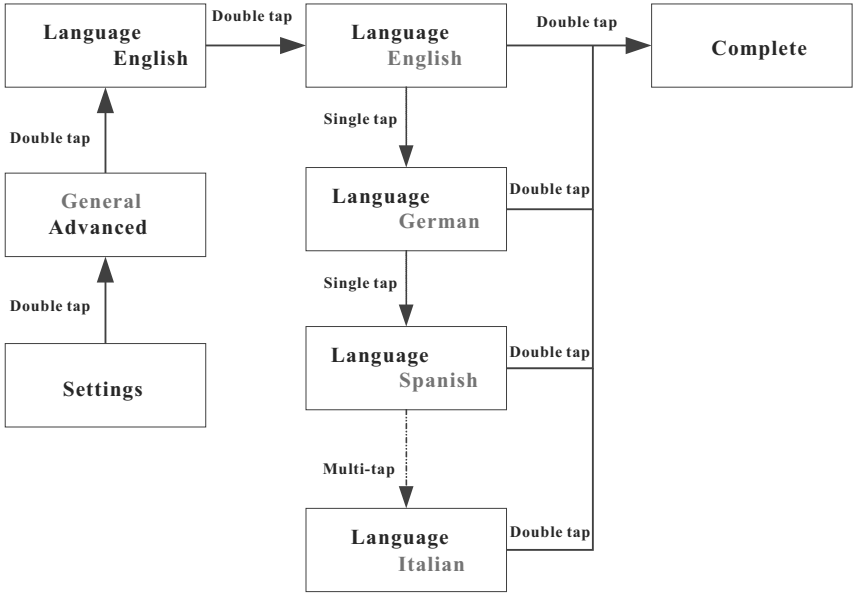

7.2.2 Setting the COM address

By default, the COM address is set to 1. To change the COM address: Single tap to switch the displayed information or increase the value by one. Double tap to confirm the setting. Set the COM address as described below:

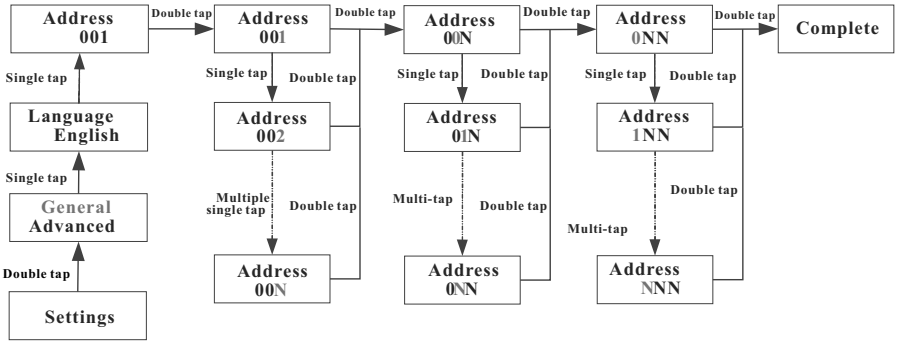

7.2.3 Setting the date

Single tap to increase the value by one. Double tap to confirm the setting. Set the date as described below:

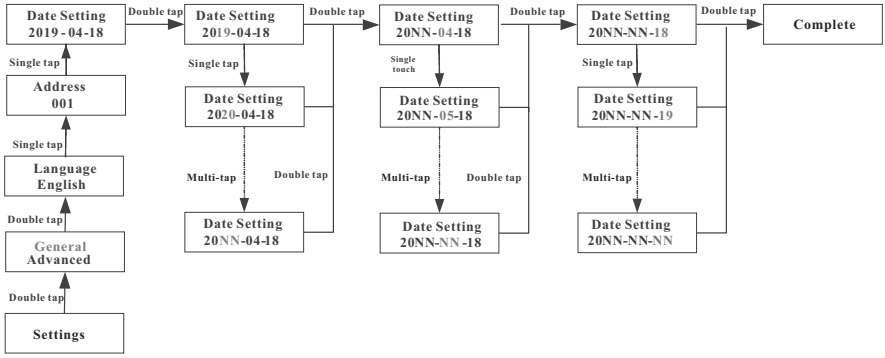

7.2.4 Setting the time

Single tap to increase the value by one. Double tap to confirm the setting. Set the time as described below:

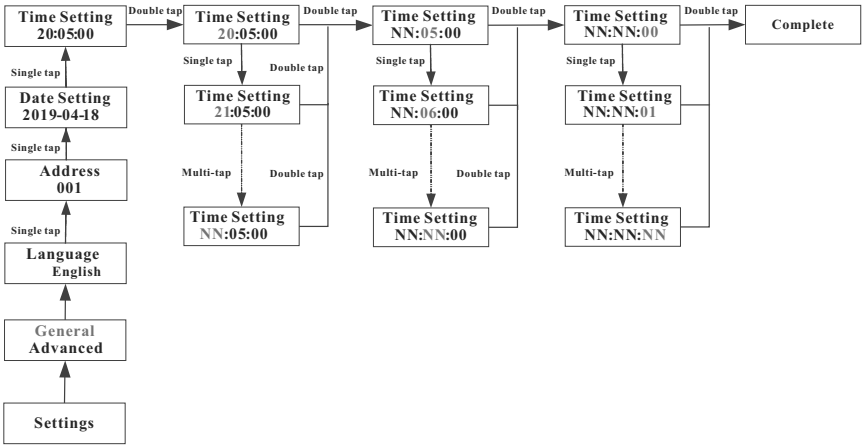

7.3 Advanced settings

7.3.1 Resetting the country/region and Power Quality Response Modes (PQRM)

Single tap to switch the displayed information or increase the value by one. Double tap to confirm your setting.
The password for accessing advanced setting is 123.

Reset the Country

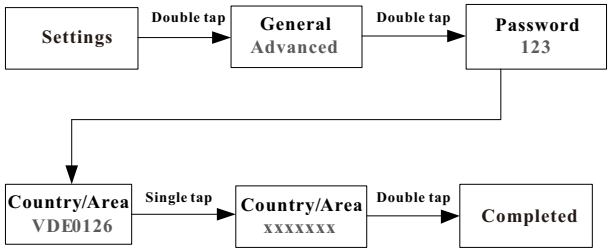

Reset the Region

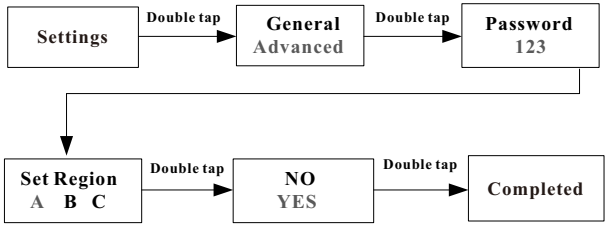

When selecting Australia as the country, you can choose to set Region A, B, or C. If New Zealand is selected, the default region will be set to NZ.

Reset PQRM

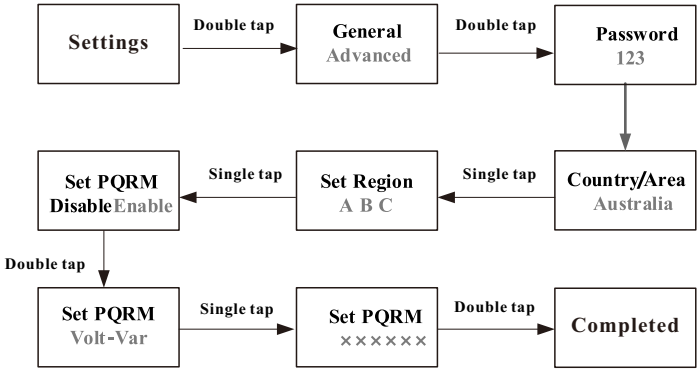

7.3.2 Setting export limitation parameters

The –XH2 series inverters can support the export limitation function when connected to an external power meter or CT, the user can set the export limitation parameters on the OLED screen, as described below. Single tap to switch the displayed information or increase the value by one. Double tap to confirm the setting:

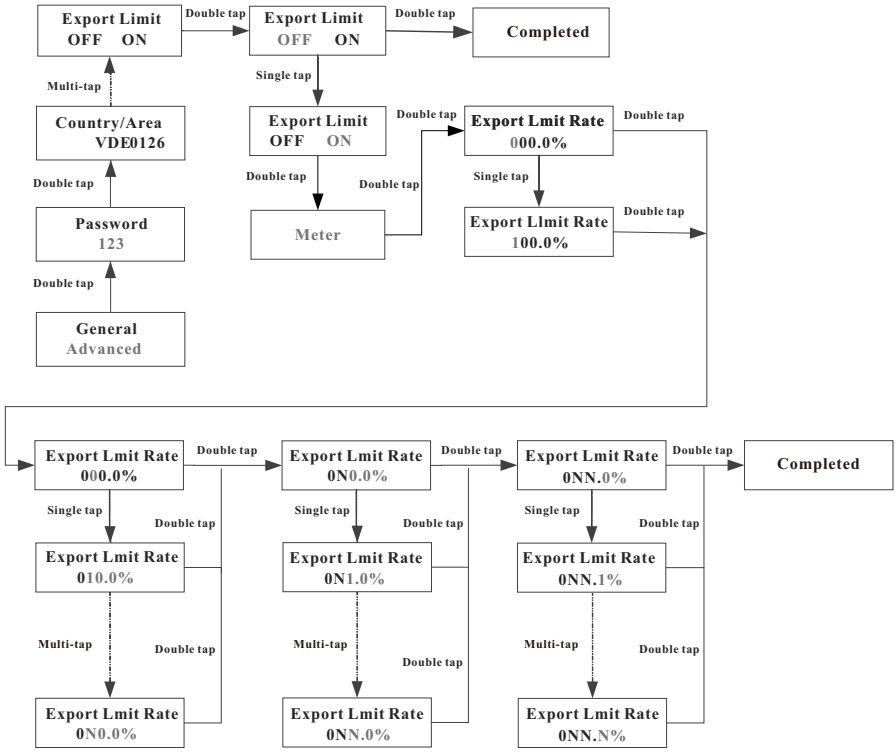

Set CT Enable(only for AU if CT is used as a power sensor)

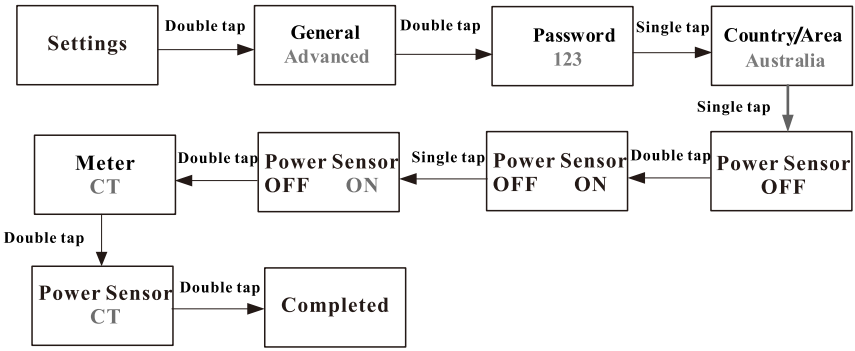

7.3.3 Restoring factory settings

Information	Please note that after this operation, all parameters, excluding the current date and time will restore to the default factory settings.

Single tap to switch the displayed information or increase the value by one. Double tap to confirm the setting.

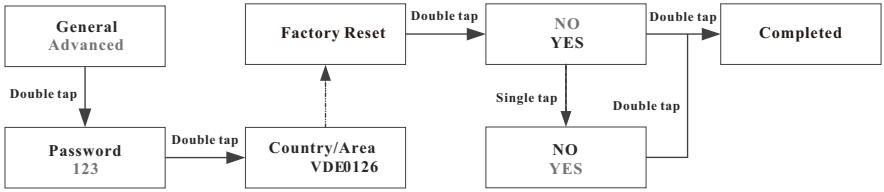

7.3.4 Setting the backup mode

You can skip this step if the inverter is not connected to a battery and a backup box (or the SYN). When the -XH2 series inverter is used with a battery and a backup box (or the SYN), the inverter can supply power to off-grid loads during grid failures by configuring the Backup setting (or SYN setting). With the Backup setting (or SYN setting) enabled, the inverter can output up to its rated power. Users can adjust the output voltage (230V by default) and the output frequency (50Hz by default). If the Backup setting (or SYN setting) is disabled, the inverter will not output power during grid failures. Users can enable the Backup setting (or SYN setting) on the OLED display, as shown below. Single tap to switch the displayed information or increase the value by one. Double tap to confirm your settings.

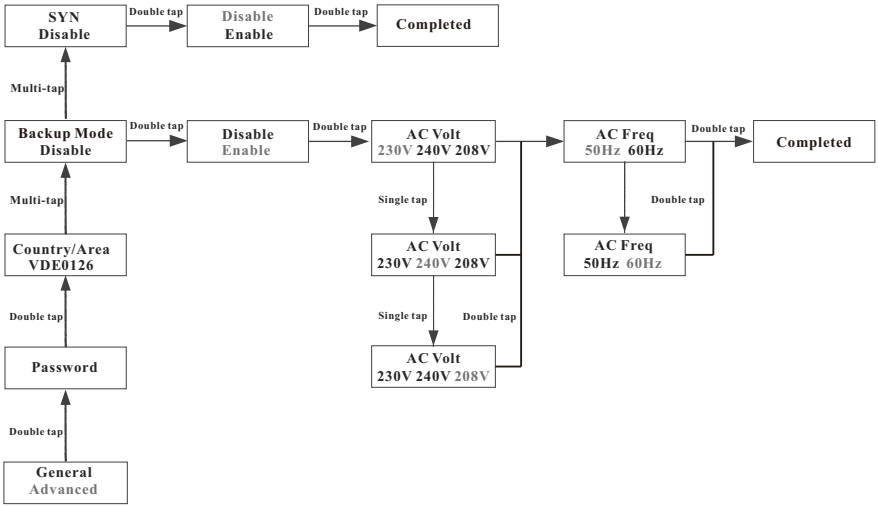

7.3.5 Setting working modes

When the -XH2 series inverter is used with the battery, it can operate in three modes: grid priority, battery priority, and load priority (the default mode is load priority). Users can configure the inverter to operate in different modes during different time periods on the OLED display. Single tap to switch the displayed information or increase the value by one. Double tap to confirm the setting. If additional time periods need to be set, users can use the Shinebus tool.

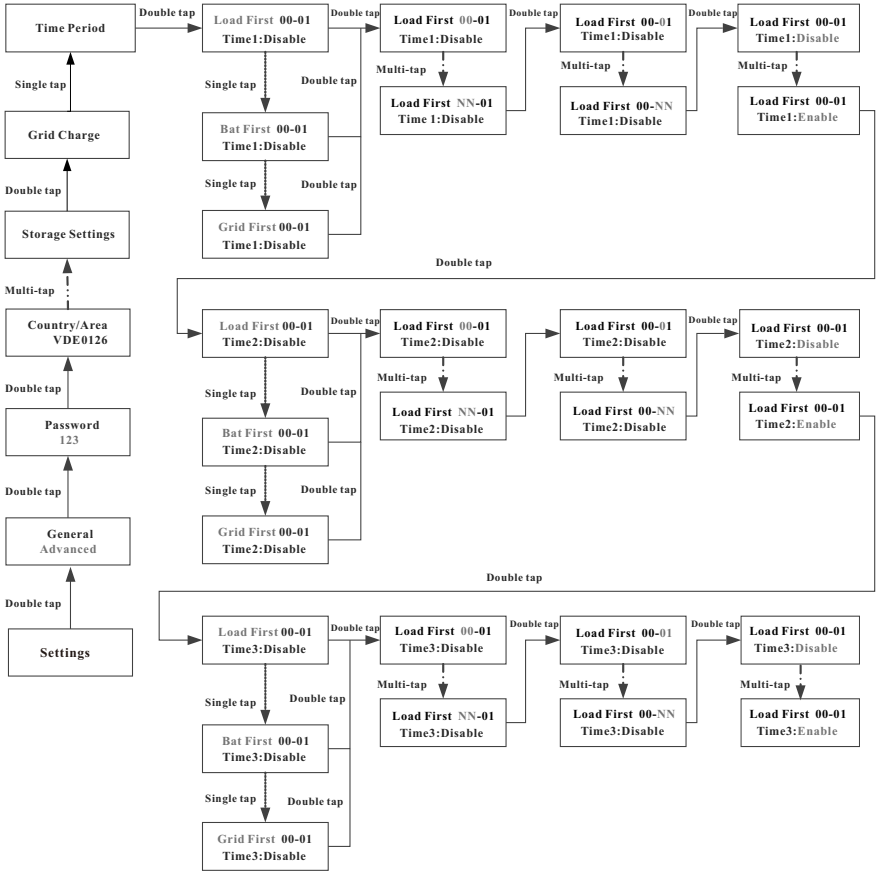

7.3.6 Setting the grid charging function

When the -XH2 series inverter is used with the battery, users can enable the grid charging function (disabled by default) on the OLED screen. This function allows the inverter to absorb energy from the grid to charge the battery. Single tap to switch the displayed information or increase the value by one. Double tap to confirm the setting. The procedure is described below:

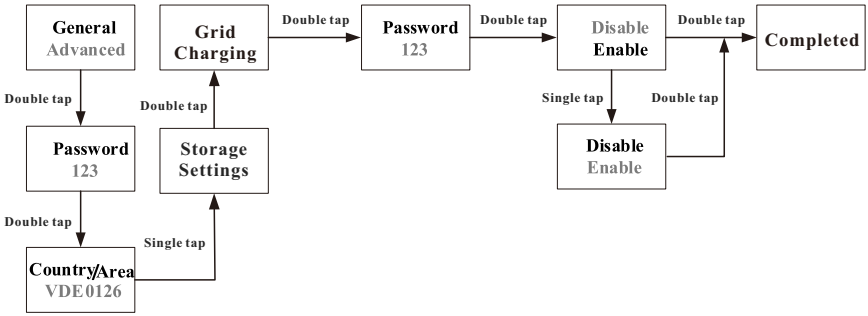

7.4 Communication interfaces

7.4.1 RJ45 Ports

The-XH2 ser i es inverter feartures a connector with 6 RJ45 ports.The RJ45 Ports' signal distribution and pin definitions are shown in the following table:

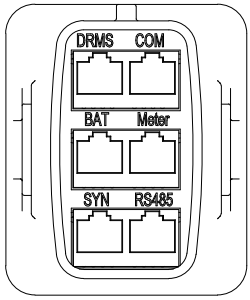

RJ45 Ports Pin Definitions

Port	PIN	Color	Definition	Function
Meter	1/4	Blue	RS485B1	Meter communication port
	5	Blue&White	RS485A1	
SYN	1	Orange&White	IO+	SYN identification signal
	2	Orange	IO-	
	7	Brown&White	RS485A1	SYN communication port
	8	Brown	RS485B1	

Port	PIN	Color	Definition	Function
SYN	3	Green&White	RS485A2	Connects to Min ShineBus or third party monitoring equipment or Backup Box
	6	Green	RS485B2	
RS485	1	Orange&White	RS485A3	VPP protocol communication port
	2	Orange	RS485B3	
	4	Blue	CT signal-out (Black wire)	For CT connection*
	5	Blue&White	CT signal-in (White wire)	
COM	4	Blue	CT signal-out (Black wire)	For CT connection*
	5	Blue&White	CT signal-in (White wire)	

Notice:The ratio of connected CT must be 100A/40mA.
*For CT connection:COM(4&5) and RS485(4&5) can be freely selected.

7.4.2 USB-A

The USB-A port is mainly for monitoring and upgrading firmware.
Remote monitoring can be enabled by connecting the devices, such as ShineWiLan-X2(Preferred choice), ShinLink-X2, Shine4G-X to the USB-A port. You can also update the firmware using a USB flash drive.
Make sure the △ is facing upward when inserting the device to the USB port and fasten the screw.

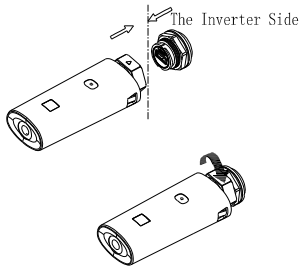

WARNING	It is not recommended to upgrade in the off-grid state.

8 Powering on/off the inverter

8.1 Powering on the inverter

1.Turn on the AC breaker between the inverter and the grid.
2.Turn on the DC switch, and the inverter will start automatically when the input voltage is higher than 50 V.

8.2 Powering off the inverter

DANGER	Do not disconnect the PV&BAT connectors under load.

Steps to power off the inverter:
1.Disconnect the inverter from the single-phase grid by turning off the AC breaker and prevent it from being reactivated.
2.Turn off the inverter's DC switch.
3.Turn off the BAT input switch of the battery.
4.Check the inverter operating status.
5.Wait a few minutes until the LED and OLED turn off to confirm that the inverter has been completely powered off.

9 Maintenance and cleaning

9.1 Checking the heat dissipation

For reduction in power output due to high temperature, you are advised to clean the heat sink to improve heat dissipation.

9.2 Cleaning the inverter

Before cleaning the inverter, turn off the AC breaker, DC switch and the BAT input switch, and wait until the inverter completely shuts down. Clean the enclosure lid, the display and the LED indicators with a cloth moistened with clear water. Do not use any cleaning agents, such as solvents and abrasives, which may cause damage to the equipment and its components.

9.3 Checking the DC disconnect

To ensure safe operation of the system, it is recommended to periodically check the DC disconnect and cables for any visible damage or discoloration. If you notice any damage or discoloration, please contact your installer immediately.

- To extend the lifespan of the DC disconnect, it is recommended to turn the rotary switch from the On position to the Off position 5 times in a row once a year, which will clean the contacts of the switch and ensure optimal performance.

Trouble shooting 11

has a rigorous quality control program in place to ensure that each inverter is manufactured to precise specifications and is thoroughly tested before shipment. In case you encounter any difficulties with the operation of your inverter, we suggest that you review the following information to troubleshoot the problem.

11.1 Error messages displayed on OLED

An error message will be displayed on the OLED screen when a fault occurs, indicating a system fault or an inverter fault. In some situations, you may need to contact for assistance. To provide you with the necessary support, we will need the following information from you:

- Serial number
- Model number
- Error message on OLED
- Brief description of the problem
- Grid voltage
- DC input voltage
- Can you reproduce the failure?
- Has this problem occurred in the past?
- What were the ambient conditions like when the problem occurred?

Information concerning the PV panels:

- Manufacturer name and model number of the PV panel
- Output power of the panel
- Voc of the panel
- Vmp of the panel
- Imp of the panel
- Number of panels in each string

If it is necessary to replace the unit, please ship it in the original box.

11.2 System faults

System faults are mainly caused by issues within the system instead of a fault with the inverter, please check the items as instructed below before replacing the inverter).

Error message	Description	Suggestion
Residual I High Error: 201	Leakage current is excessively high	1.Restart the invert. 2.If the error message still exists, contact .
PV Voltage High Error: 202	The DC input voltage exceeds the specified upper threshold.	1.Disconnect the DC switch immediately. 2.Check the voltage of each PV string with the multimerter. If the voltage of PV string is lower than 550V, contact .
PV Insulation Resistance Low Error: 203	Insulation problem	1.Check if the panel enclosure is grounded properly. 2.Check if the inverter is grounded properly. 3.Check if the DC breaker gets wet. 4.Check the impedance between PV (+) & PV (-) and the ground, which must be more than 25 KΩ or 550 KΩ (according to VDE 0126 standards). If the error message persists, contact .
AC V Outrange Error: 300	Utility grid voltage is out of permissible range.	1.Please switch off the DC switch. 2.Check the AC wiring, especially the neutral and ground wire. 3.Check if the grid voltage complies with local grid standard. 4.Restart the inverter, if the problem persists, contact .
No AC connection Error: 302	No AC connection	1.Check AC wiring. 2.Check the status of the AC breaker.
PE abnormal Error: 303	The voltage difference between the Neutral and PE is above 30V	1.Check the voltage of Neutral and PE cables. 2.Check AC wiring. 3.Restart the inverter, if the error message persists, contact .
AC F Outrange Error: 304	Utility grid frequency is out of permissible range.	1.Please switch off the DC switch. 2.Check the AC wiring, especially the neutral and ground wires. 3.Check if the grid frequency complies with local grid standard. 4.Restart the inverter, if the problem persists, Contact .
Auto Test Failure Error: 407	Self-test fails.	1.Restart the inverter, repeat the Auto Test, if the problem persists, contact .

11.3 Inverter warnings

Warning code	Meanings	Suggestion
Warning 203	A short circuit occurs in PV1 or PV2	1.Check the PV panel polarity. 2.Restart the inverter. If the warning persists, please contact customer service to replace the POWER board.
Warning 204	Dry contact function abnormal	1.After shutdown, check the dry contact wiring. 2.If the error message persists, contact manufacturer.
Warning 205	Pv1 or PV2 boost failure	1.Restart the inverter. If the warning persists, please contact customer service to replace the power board.
Warning 207	USB over-current	1.Unplug the U disk or monitor. 2.Re-access U disk or monitor after shutdown. 3.If the error message persists, contact .
Warning 401	Communication between the inverter and the meter is abnormal	1.Check if the meter is on. 2.Check if the inverter and the meter are properly connected.
Warning 404	EEPROM abnormal	1.Restart the inverter. If the warning persists, please contact customer service to replace the M3 board.
Warning 405	Inconsistent firmware version	1.Uptate the firmware to the correct version.

11.4 Inverter faults

Error code	Meanings	Suggestion
Error: 402	Output High DCI	Restart the inverter. If the problem persists, contact .
Error: 404	Bus sample fault	Restart the inverter. If the problem persists, contact .
Error: 405	Relay fault	Restart the inverter. If the problem persists, contact .
Error: 408	Over-temperature	Wait until the ambient temperature of the inverter is lower than 60°C and restart the inverter. If the problem persists, contact .
Error: 409	Bus over-voltage	Restart the inverter. If the problem persists, contact .
Error: 411	Communication between DSP and M3 abnormal	1.Restart the inverter. If the problem persists, update the DSP&M3 firmware; 2.Replace the DSP board or M3 board. If the problem persists, contact .
Error: 414	EEPROM fault	Restart the inverter. If the problem persists, contact .
Error: 417	Inconsistency between data collected by the DSP and the redundant M3	Restart the inverter. If the problem persists, contact .
Error: 420	GFCI fault	Restart the inverter. If the problem persists, contact .

Warranty 12

Please refer to the warranty card.

Decommissioning 13

13.1 Removing the inverter

1. Power off the inverter as described in section 8.
2. Remove all cables connected to the inverter.

CAUTION	**Danger of burn injuries due to hot enclosure parts!** Wait 20 minutes before removing the inverter until the housing cools down.

3. Unscrew all projecting cable glands.
4. Lift the inverter off the bracket and unscrew the bracket screws.

13.2 Packing the inverter

If possible, always pack the inverter in its original carton and secure it with tension belts. If the original carton is not available, use an equivalent carton that can accommodates the dimensions and weight of the inverter.

13.3 Storing the inverter

Store the inverter in a dry place and keep the ambient temperature between -30°C and +60°C.

13.4 Disposing of the inverter

Do not dispose of faulty inverters or accessories together with household waste. Make sure to follow the electronic waste disposal regulations that are in effect at the installation site. Ensure that the old unit and, where applicable, any accessories are disposed of in a proper manner.

14 Technical Data

14.1 Specifications

Model / Specifications	MIN 2500 TL-XH2	MIN 3000 TL-XH2	MIN 3600 TL-XH2	MIN 4200 TL-XH2
PV input quantities				
Max. recommended PV power(for module STC)	5000W	6000W	7200W	8400W
Vmax PV	500V		550V(600V for AU)	
Startup voltage	50V			
Min operating voltage	40V			
Nominal voltage	360V			
MPP voltage range	40-500V	40-500V	40-550V	40-550V
MPP voltage range at Full Power	80-450V	95-450V	115-500V	135-500V
No. of MPP trackers	2			
No. of PV strings per MPP tracker	1			
Max. input current per MPP tracker	16A			
Max. short-circuit current per MPP tracker	24A			
Max. inverter backfeed current to the PV array	0A			
DC input quantities				
Nominal DC input voltage	400V			
DC input voltage range	360-500V		360-550V	
DC input current(maximum continuous)	17A			
DC output quantities				
Nominal DC output voltage	400V			
DC output voltage range	360-500V		360-550V	
DC output current(maximum continuous)	17A			
Battery type	Cobalt Free Lithium Iron Phosphate (LFP)			
AC output quantities				
Rated output power	2500W	3000W	3600W	4200W
Rated apparent power	2500VA	3000VA	3600VA	4200VA
Nominal AC voltage	230V			

AC voltage range	160-276V			
Nominal AC grid frequency	50/60Hz			
AC grid frequency range	45-55Hz/55-65Hz			
Rated output current	10.9A	13A	15.7A	18.3A
Max. output current	11.3A	13.6A	16A	19A
Max. inrush current (Peak value/duration time)	< 10A/5ms			
Max. output fault current	62A/20us			
Max. output overload protection	16A	16A	20A	25A
Backfeed current	0A			
Power factor (@nominal power)	>0.99			
Power factor range	0.8leading... 0.8lagging			
THDi	<3%			
AC grid connection type	Single phase(L/N/PE)			
AC overvoltage category	Category III			
AC input quantities				
Nominal AC input voltage	230V			
AC input voltage range	160-276V			
AC input current (maximum continuous)	11.3A	13.6A	16A	19A
Inrush current	< 10A/5ms			
Nominal frequency	50/60Hz			
AC input frequency range	45-55Hz/55-65Hz			
Efficiency 400V				
Max. efficiency	98.2%	98.2%	98.2%	98.4%
Euro-eta	97.1%	97.1%	97.2%	97.2%
Protection devices				
DC reverse-polarity protection	Integrated			
DC switch*	Standard			
DC surge protection class	Type II			
Insulation resistance monitoring	Integrated			
AC surge protection class	Type III			

AC short-circuit protection	Integrated
Ground fault monitoring	Integrated
Grid monitoring	Integrated
Anti-islanding protection	Integrated(Active Frequency Drift)
Residual-current monitoring unit	Integrated
General data	
Dimensions (W / H / D) in mm	375*350*160
Weight	10.8 kg
Operating temperature range	–30 °C ... +60 °C
Noise emission (typical)	＜ 25 dB(A)
Altitude	4000m
Power loss in night mode	<3W
Topology	Non-isolated
Overvoltage category	PV:II AC:III BAT:II Others:I
Cooling	Natural convection
Ingress protection	IP66
Pollution degree outside the enclosure	3
Pollution degree inside the enclosure	2
Relative humidity	0~100%
DC connection	VP-D4
AC connection	AC connector
Interfaces	
Display	OLED+LED
RS485/USB	Integrated
WIFI/GPRS/4G/LAN/ RF	Optional
Warranty:10 years	Yes

Specifications \ Model	MIN 4600 TL-XH2	MIN 5000 TL-XH2	MIN 6000 TL-XH2
PV input quantities			
Max. recommended PV power(for module STC)	9200W	10000W	10000W
Vmax PV	550V(600V for AU)		
Startup voltage	50V		
Min operating voltage	40V		
Nominal voltage	360V		
PV input operating voltage range	40-550V		
MPP voltage range at Full Power	145-500V	160-500V	190-500V
No. of MPP trackers	2		
No. of PV strings per MPP tracker	1		
Max. input current per MPP tracker	16A		
Isc PV per MPP tracker	24A		
Max. inverter backfeed current to the array	0A		
PV overvoltage category	Category II		
DC input quantities			
Nominal DC input voltage	400V		
DC input voltage range	360-550V		
DC input current (maximum continuous)	17A		
DC output quantities			
Nominal DC output voltage	400V		
DC output voltage range	360-550V		
DC output current(maximum continuous)	17A		
Battery type	Cobalt Free Lithium Iron Phosphate (LFP)		
AC output quantities			
Rated output power	4600W	5000W	6000W
Rated apparent power	4600VA	5000VA	6000VA
Nominal AC voltage	230V		
AC voltage range	160-276V		

Nominal AC grid frequency	50/60Hz		
AC grid frequency range	45-55Hz/55-65Hz		
Max output current	20.9A	22.7A	27.2A
Rated output current	20A	21.7A	26.1A
Inrush current	＜10A/5ms		
Max. output fault current	＜62A/20us		
Max. output overload protection	25A	32A	32A
Backfeed current	0A		
Power factor (@nominal power)	>0.99		
Adjustable power factor	0.8leading… 0.8lagging		
THDi	<3%		
AC grid connection type	Single phase(L/N/PE)		
AC overvoltage category	Category III		
AC input quantities			
Nominal AC input voltage	230V		
AC input voltage range	160-276V		
AC input current (maximum continuous)	20.9A	22.7A	27.2A
Inrush current	＜10A		
Nominal frequency	50/60Hz		
AC input frequency range	45-55Hz/55-65Hz		
Efficiency			
Max. efficiency	98.4%	98.4%	98.4%
Euro-eta	97.5%	97.5%	97.5%
Protection devices			
DC reverse-polarity protection	Integrated		
DC switch*	Standard		
DC Surge protection class	Type II		
Insulation resistance detection	Standard		
AC surge protection	Type III		
AC short-circuit protection	Integrated		
Ground fault monitoring	Integrated		

Grid monitoring	Integrated
Anti-islanding protection	Integrated(Active Frequency Drift)
Residual-current monitoring unit	Integrated
General data	
Dimensions (W / H / D) in mm	375*350*160
Weight	10.8 kg
Operating temperature range	- 30°C ... +60 °C
Noise emission (typical)	<25 dB(A)
Altitude	4000m
Power loss in night mode	<3W
Topology	Non-isolated
Overvoltage category	PV:II AC:III BAT:II Others:I
Cooling	Natural convection
Protection degree	IP66
Pollution degree outside the enclosure	3
Pollution degree inside the enclosure	2
Relative humidity	0~100%
DC connection	Helios H4-R/VP-D4
AC connection	AC connector
Interfaces	
Display	OLED+LED
RS485/USB	Integrated
WIFI/GPRS/4G/LAN/ RF	Optional
Warranty:10 years	Yes

The AC Voltage Range may vary depending on specific country grid standard.
All specifications are subject to change without notice.

14.2 Information on the PV&BAT&AC connectors

PV connectors	VP-D4-CHSM0/ VP-D4-CHSF0		H4
BAT connectors	VP-D4B-CHSM0B/ VP-D4B-CHSF0B		/
AC connector	VPAC06EP-3S(SC)5	VPAC06EW-3P(SC)	EN032-1128-1001

14.3 Torque

Enclosure lid screws	12kgf.cm
AC terminal	6kgf.cm
Signal terminal	4kgf.cm
M6 socket head cap screws for securing the enclosure on the bracket	12kgf.cm
Additional ground screws	12kgf.cm

14.4 Accessories

In the following table you will find the optional accessories for your product. If required, you can order these from or your dealer.

Name	Brief description
ShineWiLan-X2 (Preferred choice)	WiFi or Lan monitor with USB interface
ShineLink-X2	RF monitor with USB interface
Shine4G-X	4G monitor with USB interface
485 Meter	External energy meter for inverter
GrohomeManager-X	Need to be paired with ShineRFStick-X2

If your product becomes defective, you have the option to send it to the service center for repair, or have it fixed on-site, or replace it with an equivalent device based on its model and age. Please note that the warranty does not cover transportation expenses associated with returning faulty modules. Furthermore, the cost of installing or reinstalling the modules and any other logistics or process-related costs incurred by any party regarding this warranty claim are explicitly not covered.

15 Compliance Certificates

Certificates

With appropriate settings, the unit will comply with the requirements specified in the following standards and directives (dated: Nov./2022):

Model	Certificates
MIN 2500-6000TL-XH2	CE, IEC 62109, AS4777.2, CEI 0-21, VDE0126-1-1, VRF 2019, VDE-ARN-4105, En50549, IEC62116, IEC61727, G98, G99, C10/C11, UNE217001, NTS TypeA,UKCA, NC rfg, Inmetro

Connection to the meter 16

1. Smart Meter APM-CT-G

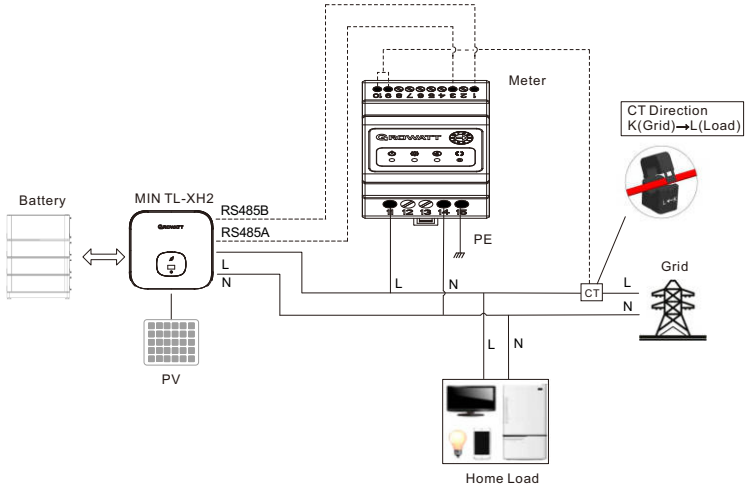

Meter Pin definition	Description	Meter Connection
Pin 1	RS485B	Meter Rj45 port_pin 4
Pin 3	RS485A	Meter Rj45 port_pin 5
Pin 9	CT+	CT, white line
Pin 10	CT-	CT, black line
Pin 11	L	Grid-L
Pin 14	N	Grid-N
Pin 15	PE	Earth

2.CHNT Meter DDSU666

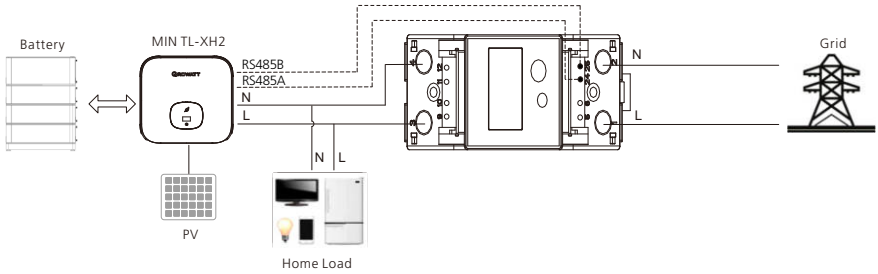

Meter Pin definition	Description	Meter Connection
pin 1	L in	Grid-L
pin 2	N	Grid-N
pin 3	L out	Load-L
pin 4	N	Load-N
pin 24	RS485A	Meter Rj45 port_pin 5
pin 25	RS485B	Meter Rj45 port_pin 4

3.EASTRON Single Phase Meter SDM230

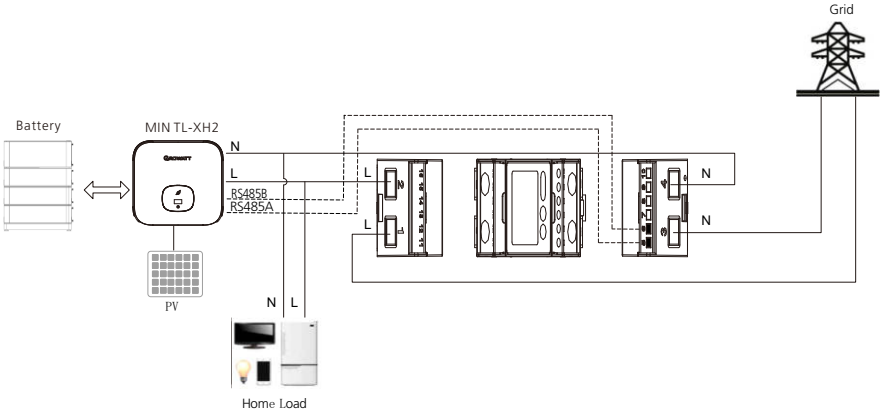

Meter Pin definition	Description	Meter Connection
pin 1	L-in	Grid-L
pin 2	L-out	Load-L
pin 3	N	Grid-N
pin 4	N	Load-N
pin 5	RS485A	Meter Rj45 port_pin 5
pin 6	RS485B	Meter Rj45 port_pin 4

4.EASTRON Single Phase CT Meter SDM120CT-MA

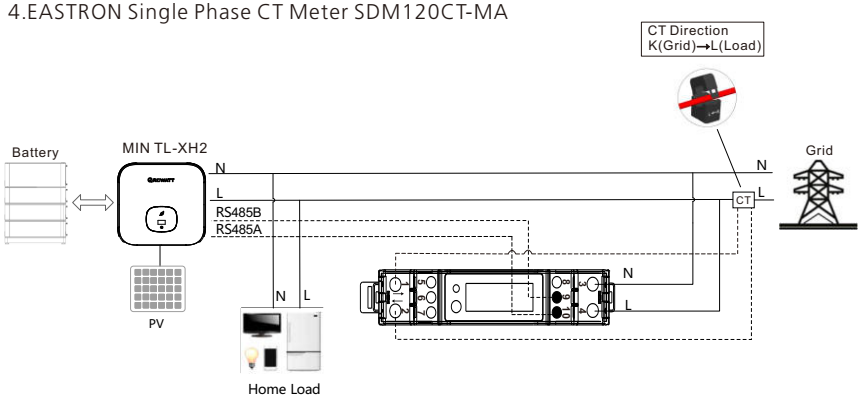

Meter Pin definition	Description	Meter Connection
pin 1	CT+	CT, white line
pin 2	CT-	CT, black line
pin 3	N	Grid-N
pin 4	L	Grid-L
pin 9	RS485B	Meter Rj45 port_pin 4
pin 10	RS485A	Meter Rj45 port_pin 5

After connecting the meter, please enable the meter.

5.100A:40mA CT for AU

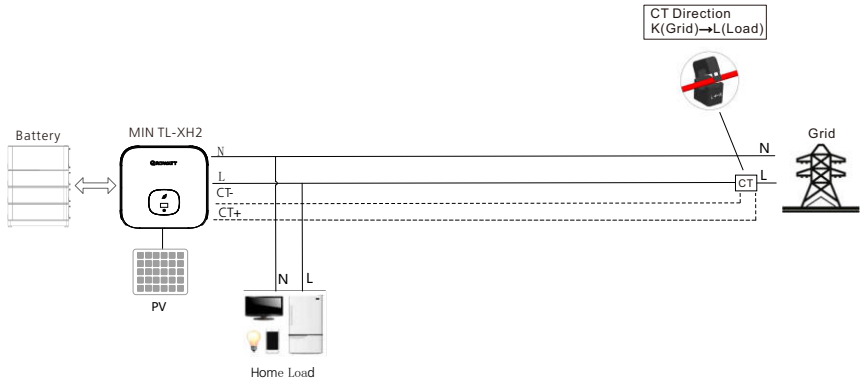

6.GrohomeManager-X

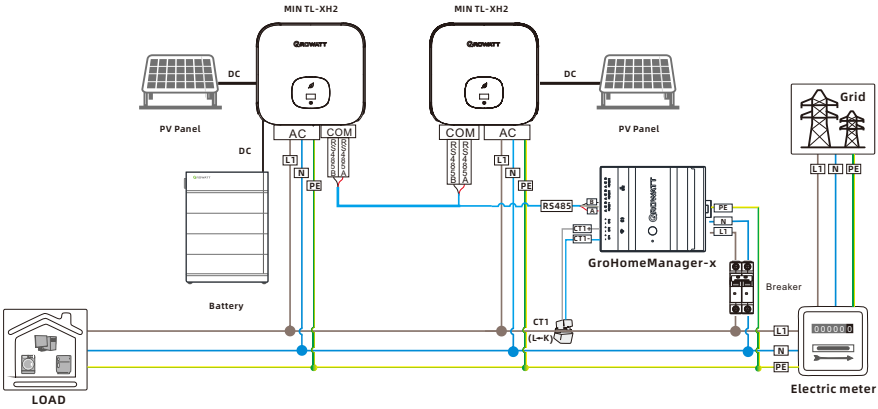

Contact 17

If you have technical problems with our products, contact the Service Line. We require the following information in order to provide you with the necessary assistance:

- Inverter type
- Serial number of the inverter
- Event number or message displayed on the inverter
- Type and number of PV modules connected
- Optional equipment

E

W

For local customer support, please visit

Download
Manual

E
W
For local customer support, please visit

GR-UM-290-A-02(PN:044.0108102)