1. Overview

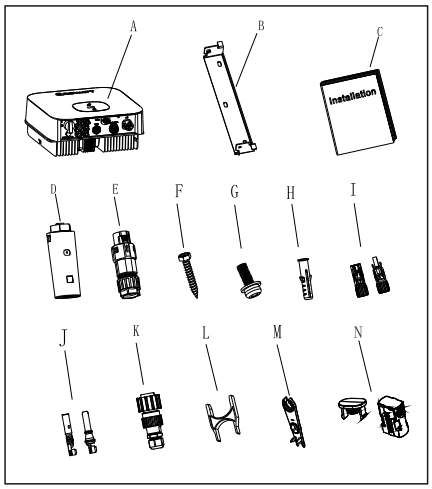

Object	Description	Quantity
A	Inverter	1
B	Mounting bracket	1
C	Quick Guide	1
D	Data logger (Optional)	1
E	Signal connector	2
F	Self-tapping screw	3
G	Cross pan head combination screw with flat washer	1
H	Plastic expansion pipe	3

I	PV+/PV- connector	2/2
J	PV+/PV- and BAT+/BAT- metal contact	3/3
K	AC connector	1
L	Signal or AC connector removal tool	1
M	PV or BAT connector removal tool	1
N	Waterproof and anti-disassembly sealing plug	3/3

⚠ **Notice:**
Before installing the inverter, please inspect the accessories according to the packing list to ensure completeness and integrity. If any accessories are damaged or missing, please contact the distributor.

2. Installing the Device

2.1 Installation Requirements

Angle and space requirements

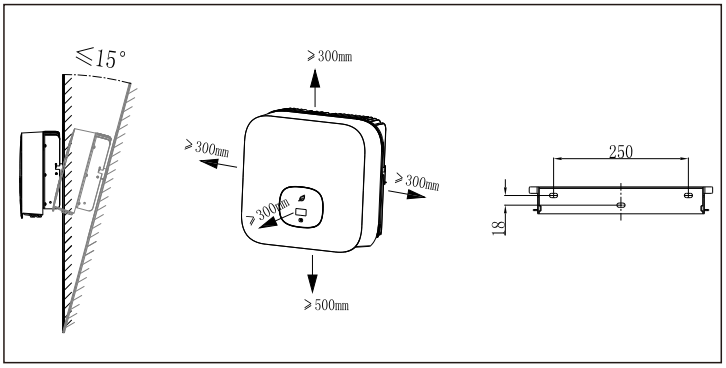

2.3 Installing the Data Logger

Ensure that the Data logger is installed securely.

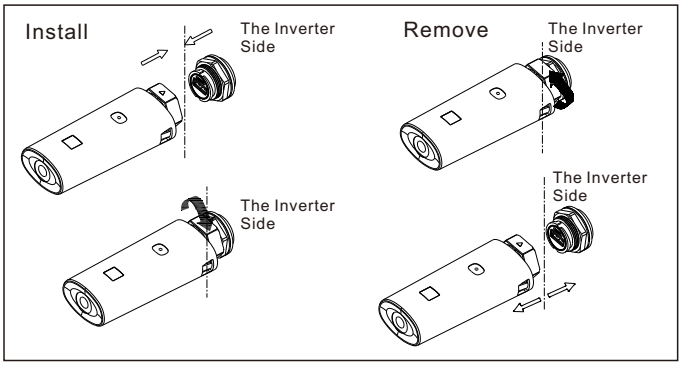

2.2 Installing the Mounting Bracket and the MIN 2500-6000 TL-XH2

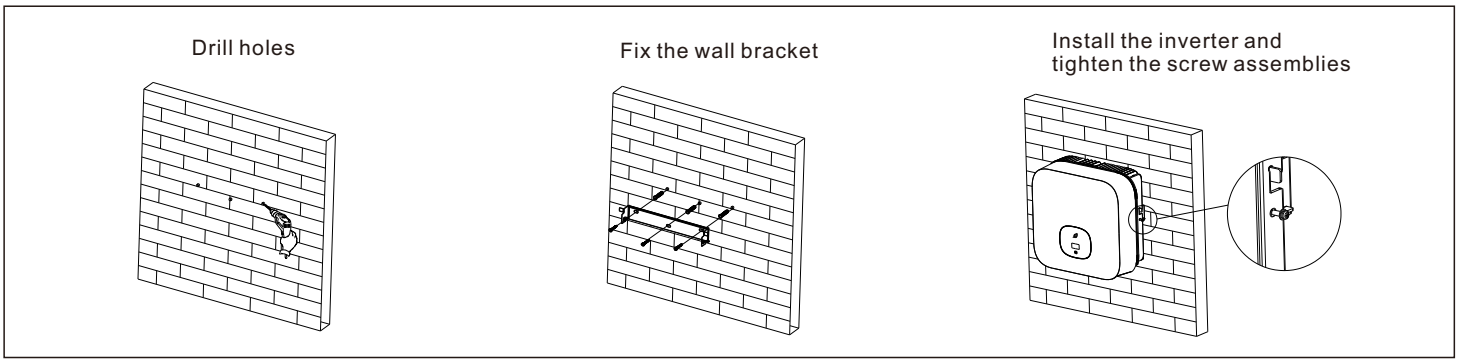

3. Connecting Cables

3.1 Installing the PV Input Power Cable

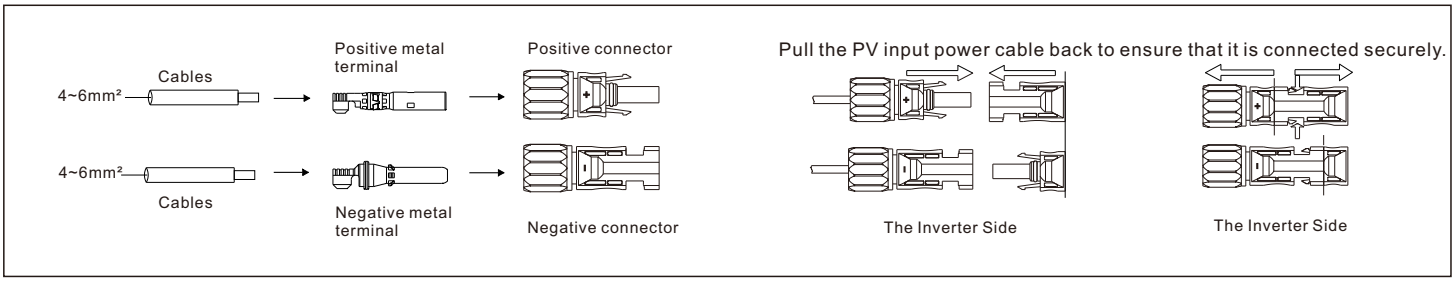

3.2 Installing the BAT Input Power Cable

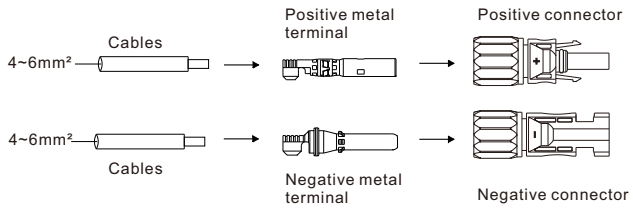

Pull the BAT input power cable back to ensure that it is connected securely.

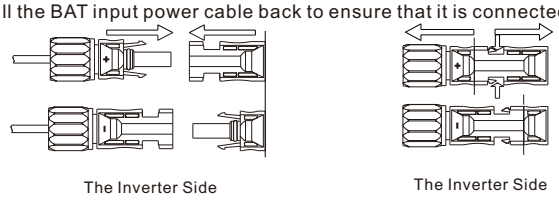

3.3 Installing the AC Output Power Cable

Connect the AC output power cable to the AC connector.

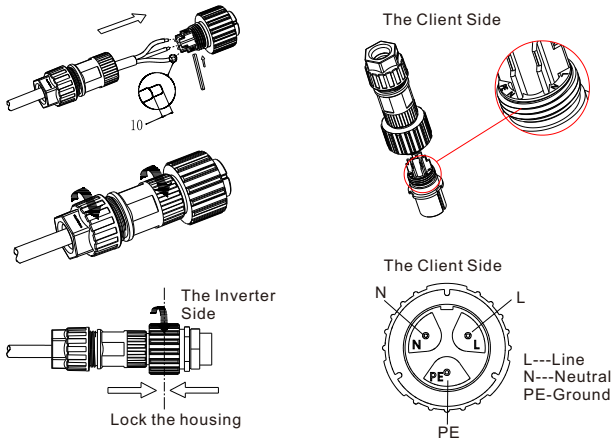

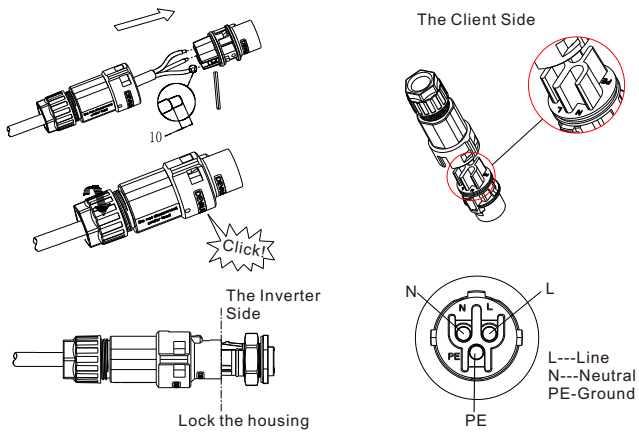

⚠ **Notice:** The specific AC connector for Australian users is shown in the right figure.
It is recommended to use 6 mm² cables. Ensure that the exposed core wires are fully inserted into the cable hole and connected securely.

3.4 Installing the SYS COM Signal Cable

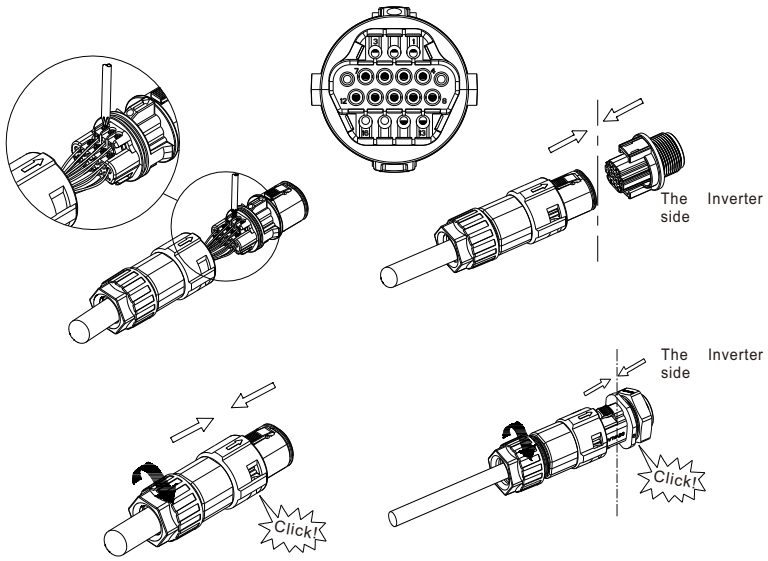

⚠ **Notice:**
The ratio of connected CT must be 100A/40mA

SYS COM Port Pin Definitions

No	Definition
1	Enable-: Connect the BAT enable signal port negative
2	Enable+: Connect the BAT enable signal port positive
3	RS485A2: Connect Min ShineBus or third party monitoring equipment
4	RS485B2: Connect Min ShineBus or third party monitoring equipment
5	RS485A1: Signal for meter or communication with SYN
6	RS485B1: Signal for meter or communication with SYN
7	BAT-B: Connect the BAT communication RS485B or CANL
8	BAT-A: Connect the BAT communication RS485A or CANH
9	RS485A3: VPP protocol communication port
10	RS485B3: VPP protocol communication port
11	SYN.EN+: SYN identification signal
12	SYN.EN-: SYN identification signal
13	+12V: Connect the SYN
14	GND : Connect the SYN
15	CT signal-out(Black wire)
16	CT signal-in(White wire)

3.5 Installing the COM Signal Cable

The 8-pin COM port connector is used as a PCI (power control interface) in Europe and an inverter DRED (Demand Response Enabling Device) connection in Australia.

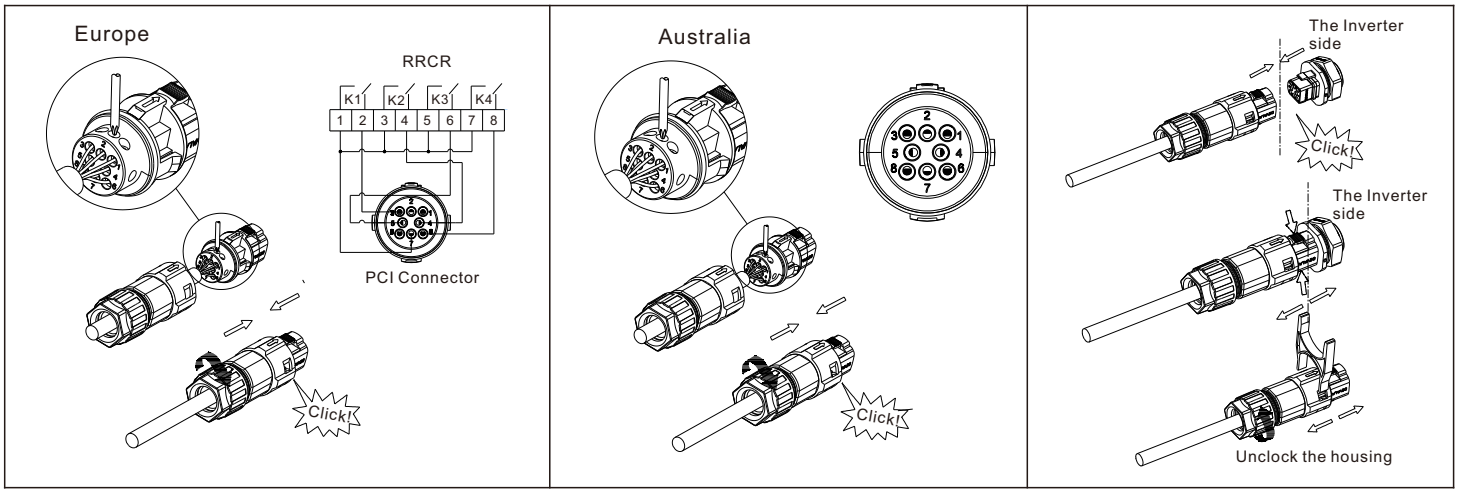

COM Port Pin Definitions- Power Control Interface(PCI).

NO	1	2	3	4	5	6	7	8
Function	+12V	GND	Relay contact 1 input	Relay contact 2 input	Relay contact 3 input	Relay contact 4 input	GND	Not connected
Connect to RRCR	Not connected		K1- output	K2- output	K3- output	K4- output	Relays common node	Not connected

COM Port Pin Definitions- DRED connection

NO	1	2	3	4	5	6	7	8
Function	+12V	GND	DRM1/5	DRM2/6	DRM3/7	DRM4/8	REFGEN	COM/DRM0

⚠Notice:

1.When laying out signal cables, separate them from power cables to avoid strong signal interference sources.
2.Do not confuse the connector to the COM port with the connector to the SYS COM port.
3.The COM port supports either the PCI or the DRM function.

4. Connecting the Meter

The following figure and table show how to connect the EASTRON meter (SDM2300Modbus) to the inverter:

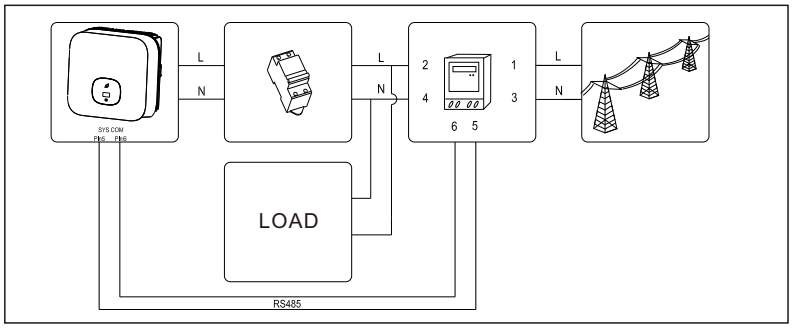

Meter Pin NO.	Description	Connect to the Inverter
1	L-in	/
2	L-out	AC connector & Load L
3	N-in	/
4	N-out	AC connector & Load N
5	RS485A	SYS COM Pin 5 RS485A1
6	RS485B	SYS COM Pin 6 RS485B1

The following figure and table show how to connect the CHINT meter (DDSU666) to the inverter:

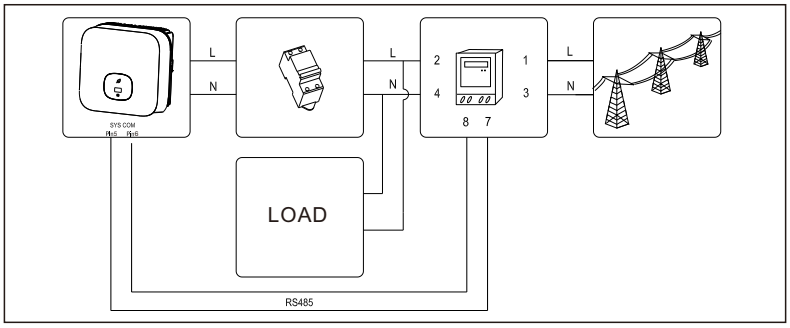

Meter Pin NO.	Description	Connect to the Inverter
1	L-in	/
2	L-out	AC connector & Load L
3	N-in	/
4	RS485A	AC connector & Load N
7	RS485A	SYS COM Pin 5 RS485A1
8	RS485B	SYS COM Pin 6 RS485B1

5. Verifying the Installation

1.The MIN 2500-6000TL-XH2 is installed correctly and securely.
2.The datalogger is correctly installed and secured.
3.The Ground cable is connected correctly and securely.
4.The DC switch and all the switches connected to the MIN 2500-6000TL-XH2 are OFF.
5.The AC output power cable, PV&BAT input power cable and signal cable are connected correctly and securely.
6.Unused terminals and ports are locked by watertight caps.

6. Button touch operation

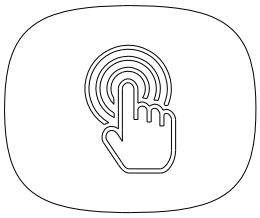

Touch button	Description
Single tap	Switch the display or increase the value by one
Double tap	Enter
Triple tap	Return to the previous menu
press and hold for 5s	Confirm the country setting or restore to the default value

7. Powering On the System

Step 1: Turn on the DC switch at the bottom of the MIN 2500-6000TL-XH2.
Step 2: Turn on the AC switch between the MIN 2500-6000TL-XH2 and the power grid.
Step 3: If the OLED screen shows "Country/Area VDE0126", please set the country following Step 4.

Country/Area
VDE0126

If the OLED screen shows "Country/Area Australia", please set the country following Step 5.

Country/Area
Australia

Step 4: Single touch to scroll through the country list and select your country, such as N4105. Then proceed to Step 6.

Country/Area
N4105

Step 5: Single touch to scroll through the country list and select your country, such as New Zealand.

Country/Area
New Zealand

Step 6: Press and hold the button for 5s, or do not touch the OLED screen for over 30s, the country setting is complete.

Set OK

⚠**Notice:**
If the LED indicator is steady green, the system is operating properly.
To reset the country, choose Parameter settings > Country setting.

8. Service and contact

T
E
W

Download
Manual