SPH 3-6KTL3 BH-UP

&

User Manual

Contents

1 Overview.....1

1.1 Information on this document 1

1.2 Target Group 1

1.3 Product description 1

1.4 Safety instructions 3

2 Safety 4

2.1 Intended use 4

2.2 Safety precautions 5

2.3 Symbols on the SPH inverter 6

3 Product Description 7

3.1 SPH series inverter..... 7

3.2 Label Explanation 8

3.3 Size and weight 10

3.4 Highlights of the SPH inverter..... 10

4 Inspection upon delivery..... 11

5 Installation 13

5.1 Basic installation requirements 13

5.2 Installation tools & connecting the RJ45 connector to the LAN cable..... 14

5.3 Installation instructions 16

5.3.1 Attention Layout（length of sensors consider） 16

5.3.2 Installation of SPH.....17

5.4 Electrical connection..... 18

5.4.1 Requirements for DC Connection..... 18

5.4.2 Connecting the PV Array (DC input) 18

5.4.3 Connecting the AC Grid terminal and the EPS Output terminal 20

5.4.4 Connecting the battery terminal..... 26

5.4.5 Connection of CT terminal..... 27

5.4.6 Connecting the meter terminal 29

5.4.7 Connecting to the CAN port for communication with the lithium battery..... 30

5.4.8 Connecting to the RS485 port for communication with the lithium battery..... 32

5.4.9 Connecting the DRMS terminal 33

5.4.10 Connecting the dry contact port 35
5.4.11 Grounding the inverter 36
6 Commissioning 37
6.1 Commissioning the SPH 37
6.2 Operation modes 37
6.2.1 Normal mode 37
6.2.2 Fault mode 38
6.2.3 Programming mode 38
6.2.4 Checking mode 38
6.2.5 Standby mode 38
6.2.6 Shutdown mode 38
6.3 Display and button 39
6.3.1 LCD display area 39
6.3.2 LED and button instruction 40
6.3.3 LCD display 40
6.3.4 Setting the working mode 42
6.3.5 Single-phase export limitation configuration 47
6.4 Communication 48
6.4.1 The USB port 48
6.4.2 Monitoring 48
6.5 Country setting 51
6.5.1 Selecting the country standard 51
6.5.2 Guidance on selecting the country standard for SPH TL BL-UP series inverters 51
6.5.3 Country standard table 52
6.5.4 Checking the firmware version, region, country/area and power quality response mode 54
7 Powerring on/off the SPH system 55
7.1 Powering on the SPH system 55
7.2 Powering off the SPH system 55
8 Notes on the installation environment, maintenance and cleaning 57
9 Fault removal 57
9.1 Troubleshooting 57

9.2 System fault information list and troubleshooting suggestions..... 57
10 Decommissioning 62
10.1 Removing the SPH inverter 62
10.2 Package and transport SPH inverter 62
10.3 Storing the SPH inverter 62
10.4 Disposing of the SPH inverter..... 62
11 Product specification 63
11.1 SPH series inverter specification..... 63
11.2 DC input terminal parameter 67
11.3 Torque 67
11.4 Accessories (optional)..... 68
12 Certificate of Compliance 69
13 Contact us..... 69

1 Overview

1.1 Information on this document

This document introduces the SPH TL BL-UP series inverters concerning its functions, installation, electrical connection, commissioning and maintenance. The content of this document is continually reviewed and amended, where necessary. Prior to operating the inverter, read through this manual and familiarize yourself with all safety precautions and the features of the product. reserves the right to make changes to the material at any time and without notice in order to keep the document accurate and up-to-date.

1.2 Target Group

Only qualified electrical technicians are allowed to install SPH TL BL-UP inverter. Personnel who will operate the equipment should possess the local/national required qualifications.

The SPH TL BL-UP inverters can be paired with two types of batteries: the lithium battery or the lead-acid battery. Customers can select the appropriate type based on their needs. If the inverter is to be paired with the lithium battery, customers should purchase the battery from . If the inverter is to be paired with the lead-acid battery, customers can purchase the battery by themselves, which are easily accessible in the market. Please beware that the corresponding operation mode should be configured based on the battery type; otherwise, it might lead to safety hazard. Qualified electrical technicians should read through this manual and observe all instructions to properly install, troubleshoot and configure the SPH inverter.Should you encounter any problem during installation, you can visit and leave a message, or call our 24-hour service hotline at 1942.

1.3 Product description

SPH TL BL-UP inverters are designed to store energy generated from the PV panels and the grid when the AC Charging function is enabled. They can also export power to the grid. In case that a grid outage occurs, the SPH TL BL-UP supports the backup function. The SPH series inverters offer six models:

SPH series has six kinds of type:

- SPH 3000 TL BL-UP
- SPH 3600 TL BL-UP
- SPH 4000 TL BL-UP
- SPH 4600 TL BL-UP
- SPH 5000 TL BL-UP
- SPH 6000 TL BL-UP

Note: the models mentioned above are hereinafter referred to as "SPH".

Note: The power class available varies in different countries. For instance, in Germany, we offer the SPH 3000-SPH 4600TL BL-UP, while SPH 5000TL BL-UP and SPH 6000TL BL-UP are not provided.

Overview:

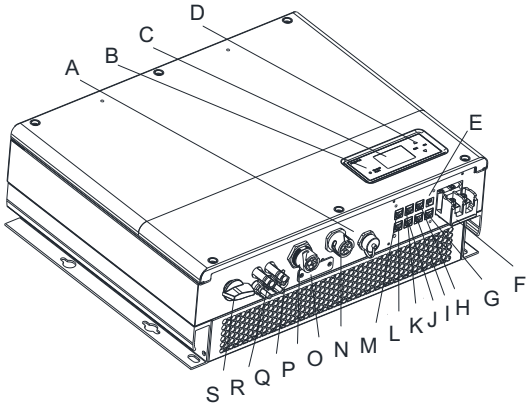

Figure 1.1

Position	Description
A	USB: USB port
B	LED of status display
C	LCD screen
D	Function button
E	Dry contact
F	BAT: Battery terminal
G	VPP: communication
H	RS485-2: RS485-2 communication
I	RS485-1: RS485-1 communication
J	NC (Not Connected)
K	CAN: CAN communication interface of Lithium battery
L	DRM: RJ45 interface of DRMs(used only in Australia)
M	CT1/METER1: RS485 communication interface of Merter/CT input terminal
N	AC Grid: On-grid connection
O	RSD (professionals only)
P	EPS OUTPUT: Off-grid connection
Q	Ground point
R	PV input
S	PV switch

1.4 Safety instructions

1. Ensure that you have selected your desired battery system, lithium battery or lead-acid battery, and the corresponding operation mode is configured based on the battery type; otherwise, the SPH would fail to work normally.
2. Read this manual carefully before installation. shall not be held liable for any device damage caused by failure to follow instructions specified in this manual.
3. Only professional and qualified electricians are allowed to install and operate the equipment.
4. When installing the equipment, do not touch other parts inside the machine.
5. All electrical connections must comply with locally applicable regulations.
6. For purposes of maintenance, please contact the local authorized O&M (operation and maintenance) personnel.
7. Before connecting the inverter to the grid, ensure that you have obtained approval from local power grid department.
8. When installing a photovoltaic module in the daytime, turn off the photovoltaic switch. Otherwise, the battery will overheat and the terminal voltage of the module will be high, which is dangerous in sunlight.

2.1 Intended use

SPH System diagram:

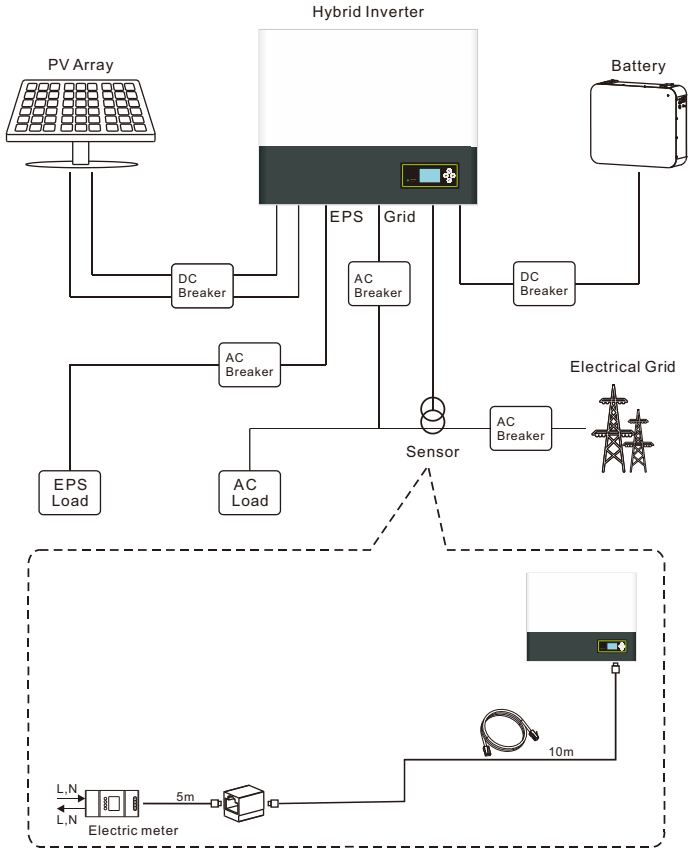

Figure 2.1

As shown in the diagram above, an entire SPH on-grid system consists of PV panels, the SPH inverter, batteries and the public grid.

Note:
As the system includes the use of battery, you must ensure proper ventilation and temperature to avoid battery explosion. The battery installation environment requirements must be strictly adhered to, referring to the specification. If the protection degree is IP20, and the pollution degree is 2, please keep the temperature at 0-40℃ with good ventilation and the humidity at 5%-85%.

2.2 Safety precautions

DANGER

Risk of high voltage!

- Operations marked with these symbols should be performed by professional personnel only.
- Keep children, people with disabilities and non-professionals away from the equipment.
- Do not allow children to play around the installation site.

DANGER

Risk of burns due to hot surfaces!

The enclosure and heat sinks of the inverter can be hot during operation.

CAUTION

Possible damage to health due to the radiation from the SPH inverter!

Do not stay closer than 20 cm to the SPH inverter for a long time.

Grounding the SPH inverter

Information

The SPH inverter must be reliably grounded to ensure personal safety.

2.3 Symbols on the SPH inverter

Symbol	Description
	Risk of high voltages which might lead to electric shocks
	Risk of burns due to hot surface
	Danger warning
5min	Danger to life due to high voltages in the SPH Residual voltage exists after the SPH is powered off. It takes about 5 minutes to discharge to the safe level. Therefore, wait 5 minutes before performing operations on it.
	Grounding: indicates the position for connecting the PE cable
	Direct Current (DC)
	Alternating Current (AC)
CE	CE marking This product complies with the requirements of the applicable EU directives
	Information that you must read and know to ensure optimal system operation

3 Product Description

3.1 SPH series inverter

LED indicator and function buttons

Mark	Description	Explanation	
	Push buttons	Allow you to set parameters on the screen	
	SPH status indicator	Green light on	SPH runs normally
		Red light on	Fault state
		Green light blinking	Alarm state
		Red light blinking	Software updating

3.2 Label Explanation

Hybrid Inverter	
Model name	SPH 6000TL BL-UP
PV input data	
Max. PV voltage	550 d.c.V
PV voltage range	120-550 d.c.V
PV Isc	16.9 d.c.A*2
Max input current	13.5 d.c.A*2
AC input/output data	
Nominal input/output power	6000/6000 W
Max. output apparent power	6000 VA
Nominal voltage	230 a.c.V
Max input/output current	27/27 a.c.A
Nominal frequency	50/60 Hz
Power factor range	0.8leading~0.8lagging
Stand alone data	
Nominal AC output power	4000 VA
Nominal AC output voltage	230 a.c.V
Nominal AC output frequency	50/60 Hz
Battery data	
Battery voltage range	42-59 d.c.V
Max. charging and discharging current	85 d.c.A
Type of battery	Lithium/Lead-acid
Others	
Safety level	Class I
Ingress protection	IP65
Operation ambient temperature	-25°C - +60°C

VDE0126-1-1

X **Made in China**

Description of the nameplate:

Hybrid Inverter	
Model name	SPH 6000TL BL-UP
PV input data	
Max. PV voltage	550 d.c.V
PV voltage range	120-550 d.c.V
PV Isc	16.9 d.c.A*2
Max input current	13.5 d.c.A*2
AC input/output data	
Nominal input/output power	6000/6000 W
Max. output apparent power	6000 VA
Nominal voltage	230 a.c.V
Max input/output current	27/27 a.c.A
Nominal frequency	50/60 Hz
Power factor range	0.8leading~0.8lagging
Stand alone data	
Nominal AC output power	4000 VA
Nominal AC output voltage	230 a.c.V
Nominal AC output frequency	50/60 Hz
Battery data	
Battery voltage range	42-59 d.c.V
Max. charging and discharging current	85 d.c.A
Type of battery	Lithium/Lead-acid
Others	
Safety level	Class I
Ingress protection	IP65
Operation ambient temperature	-25°C - +60°C

3.3 Size and weight

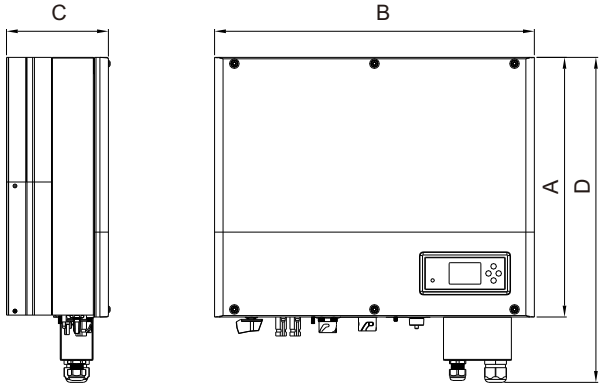

Figure 3.1

	A (mm)	B (mm)	C (mm)	Weight (kg)
SPH TL BL-UP	456	565	188	27

3.4 Highlights of the SPH inverter

Features below:

- The SPH inverter stands out with the following features:
- All-in-one design, maximizing self-consumption. Support the backup functions.
- Smart energy management with various working modes.
- Advanced battery safety.
- Easy installation.
- Two MPPT inputs
- Typical on/off-grid switching time is 10 ms.

4 Inspection upon delivery

WARNING	➢ Before unpacking the inverter, please check whether the packaging is intact and ensure that it has not been damaged during transportation or handling, so as not to affect the integrity or safety of the insulating material; failure to do so may lead to safety hazards. ➢ After unpacking the inverter, please check if there is any device damage or missing components. If so, please contact your supplier. ➢ Unauthorized removal of necessary protection, incorrect use, improper installation and operation may result in serious safety hazards, risk of electric shock or equipment damage. ➢ To avoid device damage caused during movement, please transport the inverter properly.The total weight of the SPA inverter can be up to 27 kg.

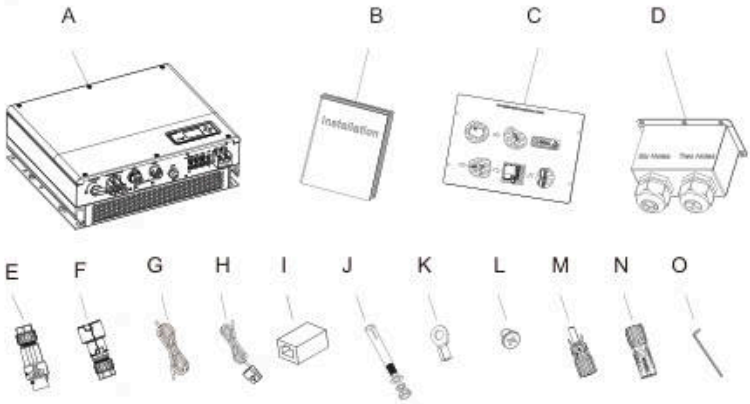

Figure 4.1

Item	Number	Description
A	1	SPH inverter
B	1	User Manual
C	1	Paperboard (installation guide)
D	1	Waterproof cover
E	1	AC Grid connector
F	1	EPS output connector
G	1	Communication cable
H	1	Current sensor
I	1	RJ45 connector

Item	Number	Description
J	4	M6 set screw
K	2	Battery output terminal
L	6	Screw
M/N	2/2	MC4 connector
O	1	Allen key

The SPH-UP features an uninterrupted power supply (UPS) level switch with a maximum transfer time of 16ms. However, it cannot be used as a UPS in critical scenarios such as medical power supply. For maintenance purposes, it is necessary to install a single-phase automatic transfer switch (ATS-S) on both the EPS and grid sides. ATS-S is an optional configuration in the installation process. With an ATS-S installed, it can automatically switch to off-grid mode during a power outage to provide power to the EPS load.

1. The EPS load is powered from the EPS side.
2. The EPS load is powered from the grid side.

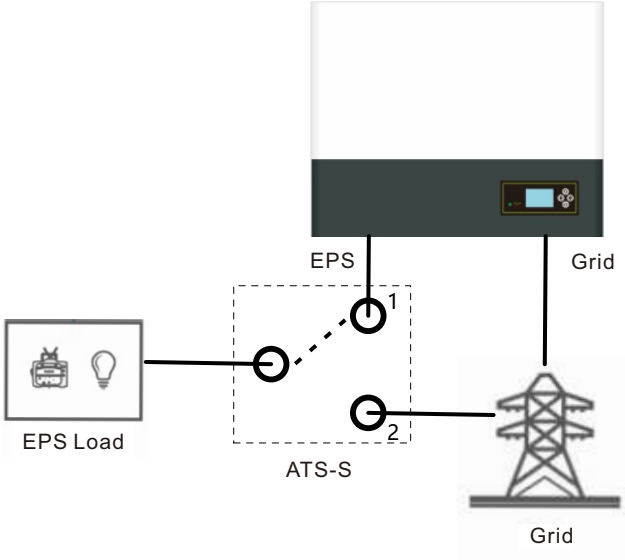

Figure 4.2

5 Installation

5.1 Basic installation requirements

A. Ensure that the installation surface meets the load-bearing requirement for supporting the weight of the SPH inverter.
B. The mounting location must be suitable for the dimensions of the SPH inverter.
C. Do not install the equipment on structures made of flammable or thermolabile materials.
D. The SPH inverter is protected to IP65, and its pollution degree is 2.
Please refer to the figures below for the installation environment requirements:

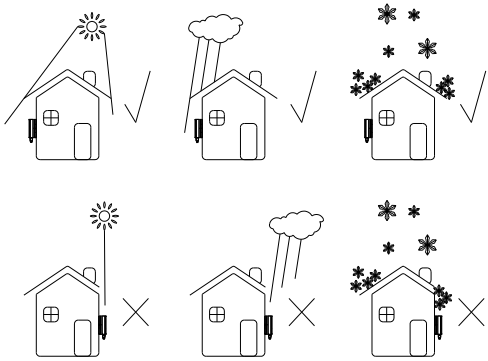

Figure 5.1

E. Do not install the battery too far away from the SPH inverter. The distance between the SPH and
the battery should be less than 5 m.
F. The ambient temperature should be -25℃~60℃.
G. The SPH can be mounted vertically or at a maximum back tilt of 15 degrees.
Please refer to the figures below for the mounting angle requirements:

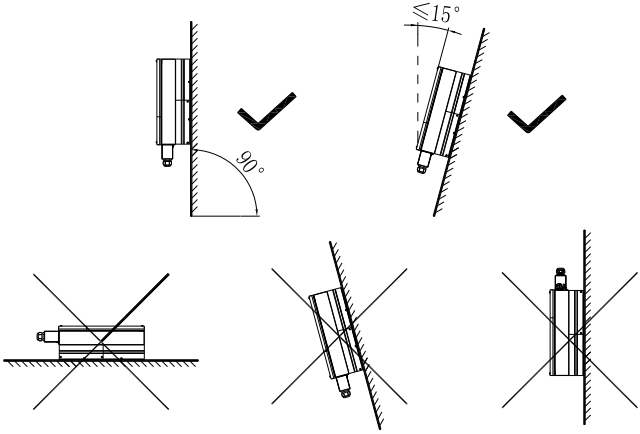

Figure 5.2

H. The installation location should be readily accessible for disconnecting means.
I. To ensure optimal operation of the inverter and facilitate ease of operation, please reserve enough space around the inverter.

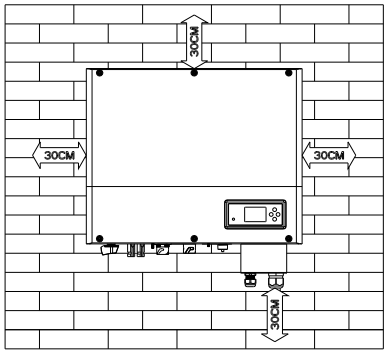

Figure 5.3

J. Keep the inverter away from the television antenna, or other antennas and associated cables.
K. Do not install the equipment in the living area.
L. Ensure that the installation location is inaccessible to children.
M. Consider the space for securing the battery when installing the battery. For the battery dimensions, you can refer to the relevant User Manual.
N. Do not install the battery in areas where flammable or explosive materials are stored.

5.2 Installation tools & connecting the RJ45 connector to the LAN cable

Please prepare the following tools before installing the inverter:

Figure 5.4

No.	Functions	No.	Functions
1	Crimp the RJ45 connector	5	Unscrew screws
2	Strip cables	6	Knock explosion bolt
3	Disconnect PV terminal	7	Drill holes on the wall
4	Unscrew nuts		

Connecting the RJ45 connector to the LAN cable:

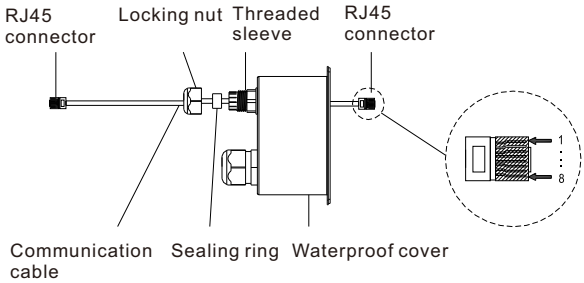

Figure 5.5

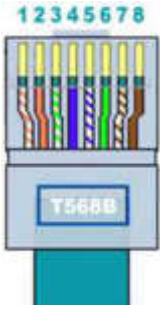

Figure 5.6

No.	CAN	METER	COM	DRMS	485-1/485-2	485-3
1	/	RS485B	DRY+	DRM1/5	RS485B	RS485B
2	/	GND	/	DRM2/6	GND	GND
3	/	/	DRY-	DRM3/7	/	/
4	CANH	/	/	DRM4/8	/	/
5	CANL	RS485A	/	REF	RS485A	RS485A
6	GND	/	/	COM	/	/
7	/	/	/	/	/	/
8	WAKEUP	/	/	/	/	/

Rj45 wiring color code:

PIN	1	2	3	4	5	6	7	8
Color	White/ Orange	Orange	White/ Green	Blue	White/ Blue	Green	White/ Brown	Brown

5.3 Installation instructions

5.3.1 Attention Layout（length of sensors consider）

There're two types of sensors for use with SPH. One is wired current sensor, one is meter sensor, if you choose wired sensor or meter. Before installing you should know something that as below:

The cable of wired sensor is suggested not longer than 15m,and the meter is suggested not longer than 100m. So you need to consider the length between SPH with combiner box for the sensor should be installed in the live line.

The layout of the inverter for residential installation as follow:

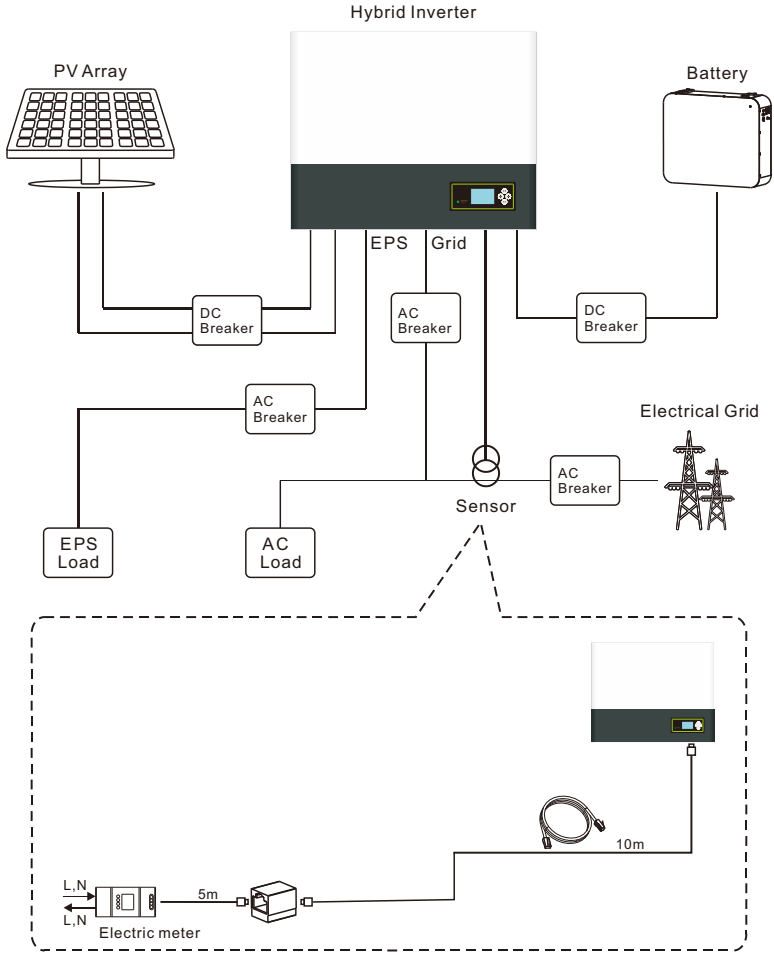

Figure 5.7 SPH 3000-6000TL BL-UP

5.3.2 Installation of SPH

1. Determine the installation position on the wall, ensure that it is suitable for the weight and dimensions of the inverter.
2. Use the paperboard (installation guide) to determine the hole positions, ensuring that the paperboard is level.
3. Mark the four hole positions on the wall, then remove the paperboard.
4. Drill four holes (Φ8 mm) at the marked positions to a depth of greater than 55 mm.
5. Insert four expansion bolts into the holes (Φ8) (as Fig 5.8b shows).
6. Hang the inverter onto the four screw sets (as Fig 5.8c shows).
7. Fasten the nuts of the screw sets (as Fig 5.8d shows).
8. The installation is complete.

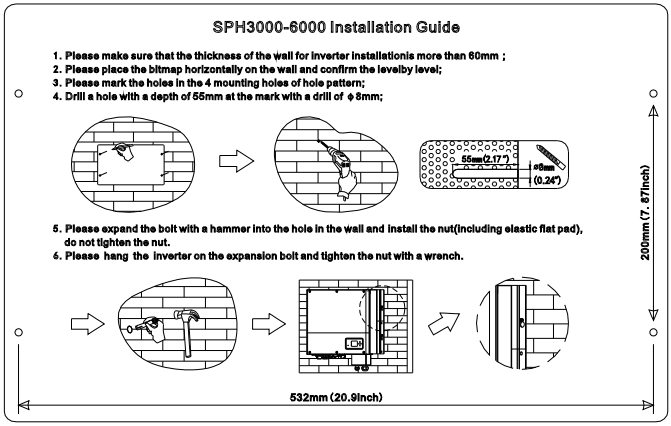

a)

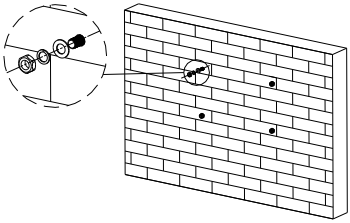

b)

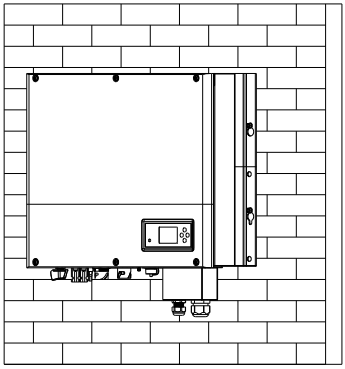

c)

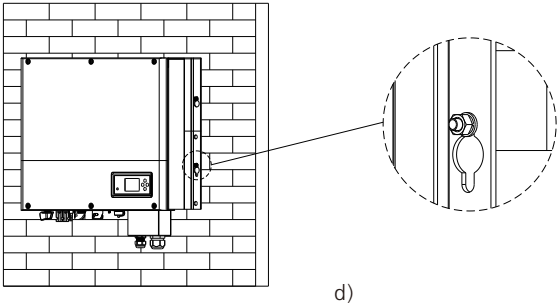

d)

Figure 5.8

5.4 Electrical connection

5.4.1 Requirements

WARNING	The solar modules connected to the inverter must conform to the Class A requirements of the IEC 61730 standard. Please use the male and female PV connectors of the same brand.

The SPH single-phase inverter has 2 independent inputs: MPPT1 & MPPT2.

Note: 1. The PV connectors are in pair (male and female).
2. The bulit-in DC switch isolator of the SPH single-phase inverter is optional in Australia.

CAUTION

If the inverter is not equipped with a DC switch but this is mandatory in the country of installation, install an external DC switch.
The following limit values at the DC input of the inverter must not be exceeded:

Model	Max. current MPPT1	Max. current MPPT2
SPH 3000-6000TL BL-UP	13.5A	13.5A

5.4.2 Connecting the PV Array (DC input)

DANGER

Danger to life due to lethal voltages!
The photovoltaic array provides DC voltage to the inverter with solar irradiance. Before connecting the photovoltaic array, ensure that the DC switch and AC circuit breaker are disconnected from the inverter when adjusting the photovoltaic array. Do not connect or disconnect the DC connector under load.
Make sure the maximum open circuit voltage (Voc) of each PV string is less than the maximum input voltage of the inverter.
Check the design of the PV plant. The Max. open circuit voltage, which can occur at solar panels' temperature of -15℃, must not exceed the Max. input voltage of the inverter.

CAUTION	1. Improper operation during the wiring process can cause fatal injury to operator or unrecoverable damage to the inverter. Only qualified personnel can perform the wiring work. 2. Please don't connect PV array positive or negative pole to the ground, which could cause serious damages to the inverter. 3. Check the connection cables of the PV modules for correct polarity and make sure that the maximum input voltage of the inverter is not exceeded. 4. Grounding the PV modules: The SPH is a transformerless less inverter. That is why it has no galvanic separation. Do not ground the DC circuits of the PV modules connected to the SPH. Only ground the mounting frame of the PV modules. If you connect grounded PV modules to the SPH, the error message "PV ISO Low" will be displayed. 5. Comply with the local requirements for grounding the PV modules and the PV generator. recommends connecting the generator frame and other electrically conductive surfaces in a manner which ensures continuous conduction with ground in order to have optimal protection of the system and personnel. 6. Please disconnect the PV DC switch when maintaining the inverter.

Connecting the PV connectors

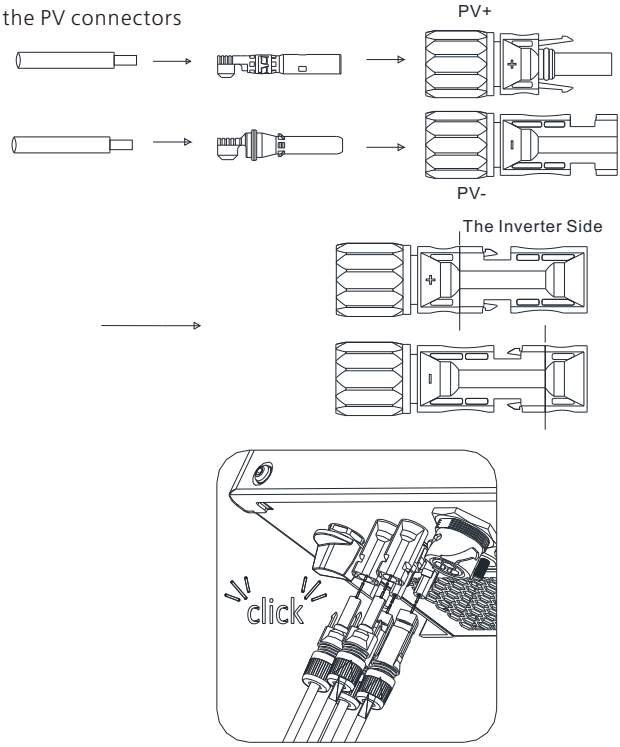

Figure 5.9

Connect the PV panels using the MC4 connectors. Please proceed as follows:
Step 1: Turn off the PV switch.
Step 2: Insert the positive and negative PV cables into the positive (+) and negative (-) poles of the PV input connector respectively.
Ensure that the PV input voltage and current do not exceed the following thresholds:
Max. PV voltage: 550V (consider the lowest temperature)
Max. PV input current per route: 13.5 A
Max. PV input power per string: 5300W

Note:
It is recommended that cable greater than or equal to 4mm2 / 10 AWG be used.

5.4.3 Connecting the AC Grid terminal and the EPS Output terminal

The SPH inverter comes with the AC Grid terminal and the EPS Output terminal. From the bottom view, the AC Grid terminal is on the right, used to connect the inverter to the utility grid; while the EPS Output terminal is on the left, connected to critical loads for uninterrupted power supply.

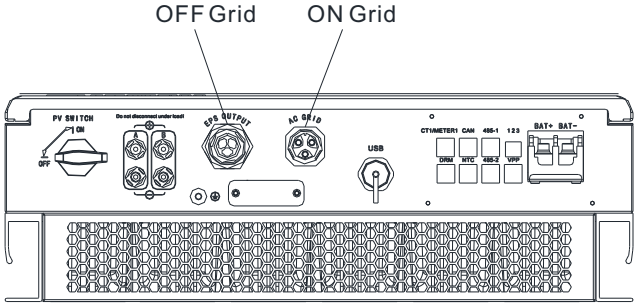

Figure 5.10 SPH 3000-6000TL BL-UP

Wire suggest length

Conductor cross section	Max cable length					
	SPH 3000TL BL-UP	SPH 3600TL BL-UP	SPH 4000TL BL-UP	SPH 4600TL BL-UP	SPH 5000TL BL- UP	SPH 6000TL BL- UP
5.2mm^2 10AWG	40m	33m	28m	26m	25m	23m
6.6mm^2 9AWG	50m	42m	36m	33m	32m	29m

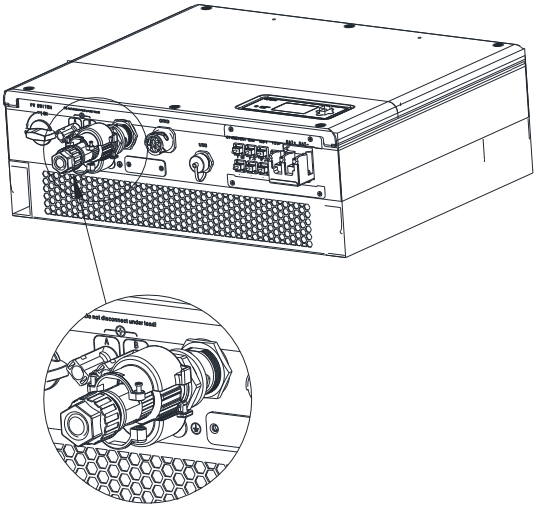

Figure 5.11

NOTE	When installing the euqipment, you need to install the EPS output connector (Item F in the accessory kit) onto the SPH whether the EPS output port is to be connected or not, as shown in Fig 5.11. Note: Locking screws (for details of the accessory kit, please see Figure 4.1).

The AC wiring step:

Step 1. Uninstall the parts of the AC connection plug from the accessory bag.

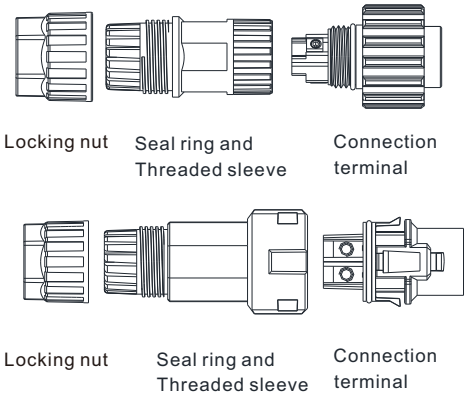

Figure 5.12

Step 2: Route the stripped cables through the locking nut, sealing ring and threaded sleeve, insert them into the connection terminal in accordance with the marks on the connection terminal, and secure the connection by tightening the screws. You can pull the cables gently to ensure that the cables are secured in place.

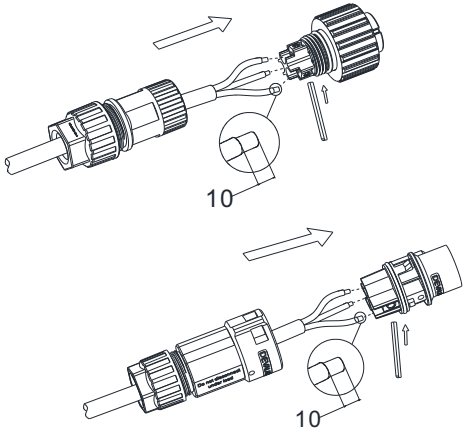

Figure 5.13

Step 3: Push the threaded sleeve onto the connection terminal until both are secured tightly. Then fasten the locking nut.

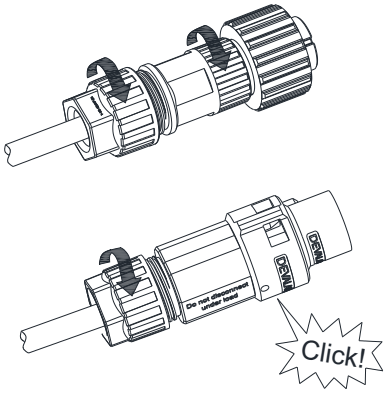

Figure 5.14

Step 4: Push or rotate the connector to the terminal on the inverter until both are secured tightly. Then install the protective cover onto the EPS connector and tighten it with the screwdriver.

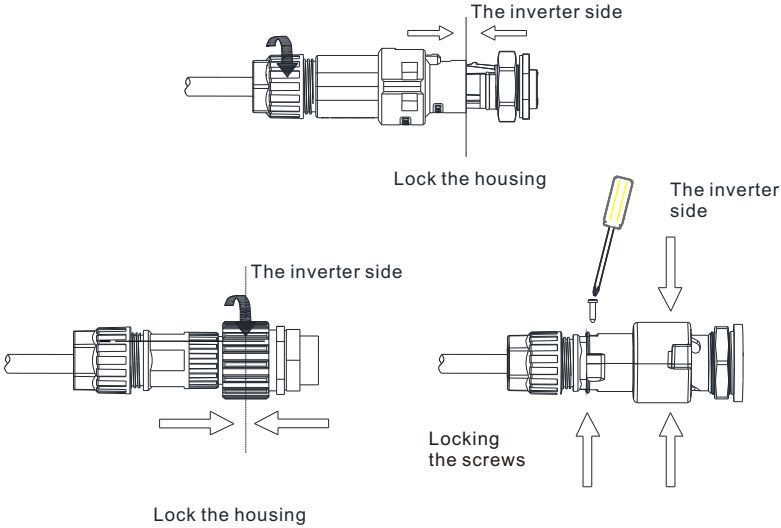

Figure 5.15

Step 5: When removing the AC connector, insert the screwdriver into the opening and press down, then pull it from the slot.
When removing the EPS connector, you need to remove the protective cover first by loosening the screws on it with a screwdriver. Then rotate the EPS connector counterclockwise and pull it out.

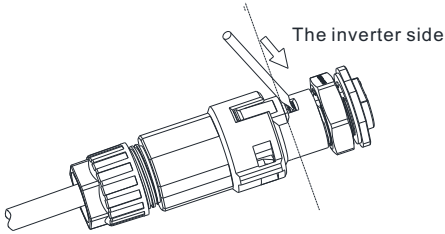

Removing the AC connector

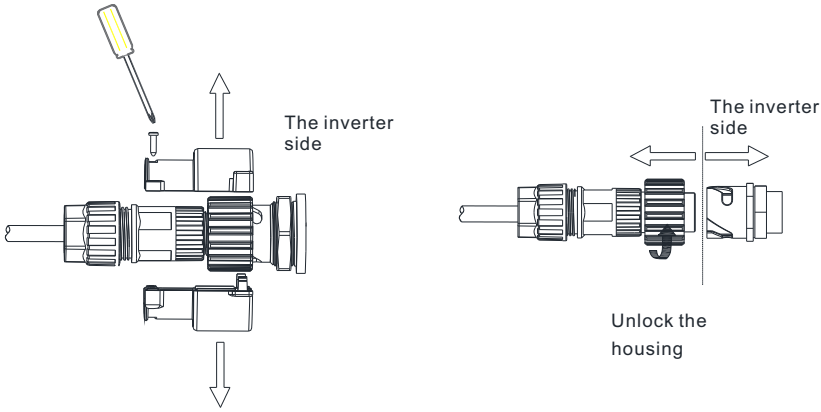

Figure 5.16

The recommended wiring diagrams are as follows:

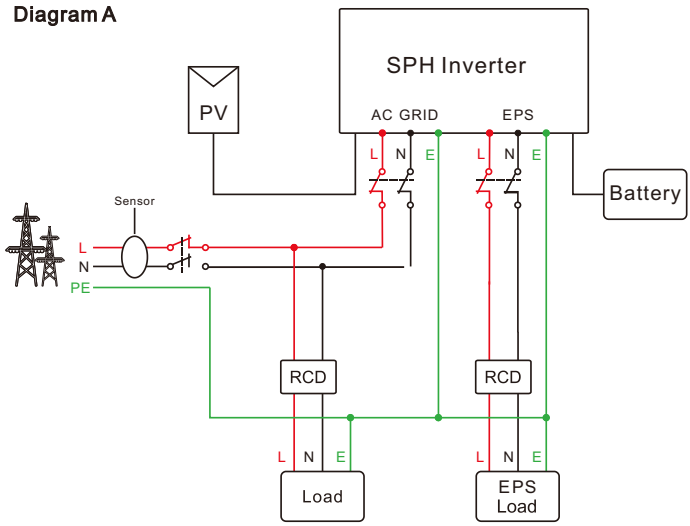

Figure 5.17

Note:
This diagram is an example for the on-grid system without special requirement on the electrical connection.

DiagramB

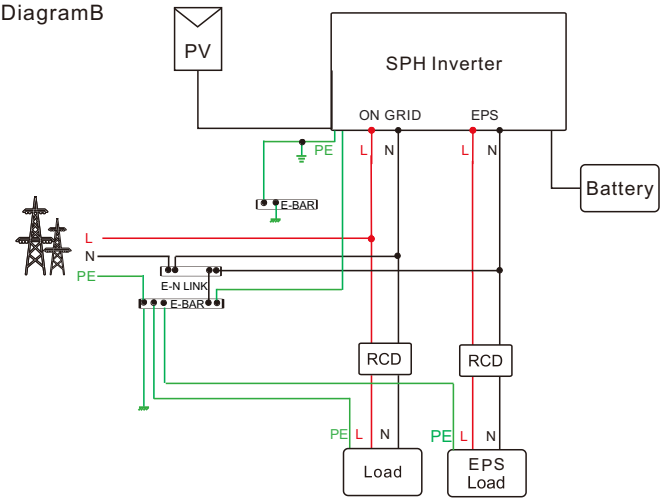

Figure 5.18

Note:

1.This diagram is an example for cable connection in Australia and New Zealand, where a switch cannot be installed on the N line.

2.The grid-connected N wire, off-grid N wire and mains N wire of the machine are connected together through copper bars. Since the far end of the mains N wire is grounded, the grid-connected N wire and the off-grid N wire of the machine are always grounded.

DiagramC

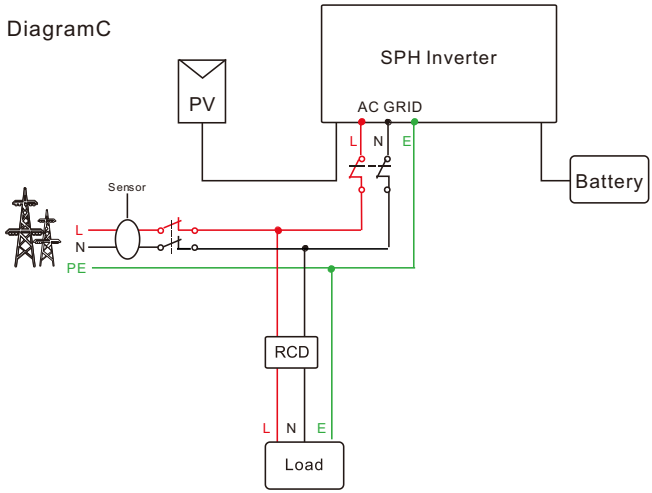

Figure 5.19

Note: This diagram is an example for customers who only want to build the on-grid energy storage system without backup function.

WARNING	➢ If you want to use AC GRID only, please refer to chart 5.17 connect with AC grid and float EPS OUTPUT. ➢ If you have no battery now, you can also float BAT terminal, and this hybrid inverter will only work like a PV inverter. ➢ If you want to use both AC GRID power and backup power, please refer to chart 5.15 and 5.16 connect with AC GRID and EPS OUTPUT like the chart show. ➢ AC GRID terminal and EPS OUTPUT terminal can't directly connect together. ➢ EPS OUTPUT terminal can't connect to grid. ➢ If you want to use AC GRID and EPS OUTPUT, you can use ATS (automatic transfer switch) like chart 5.15 and 5.16 before or ask for help to connect them. ➢ The first start of system needs Grid power. NOTE: The inverter has the function of detecting residual current and protecting the inverter against residual current. If your inverter must equip a AC breaker which has the function of detecting residual current, you must choose a Type A RCD breaker with the rating residual current more than 300mA.

5.4.4 Connecting the battery terminal

Please proceed as follows to connect the battery cable:

1. Unscrew the swivel nut from the cable gland.
2. Thread the swivel nut over the battery cable.
3. Press the cable support sleeve out of the cable gland.
4. Remove the filler plug from the cable support sleeve.
5. Route the network cable through an opening in the cable support sleeve.
6. Thread the network cable through the cable gland.
7. Thread cables into connection terminal, then press the terminal with relevant tools and make sure battery cables are securely connected (If you have purchased the lithium battery, the battery cable is delivered in the original package).
8. Connect the positive pole (+) of the battery cable to the positive battery terminal on the inverter, and the negative pole to the negative battery terminal (-).
9. Continue to install other cables.

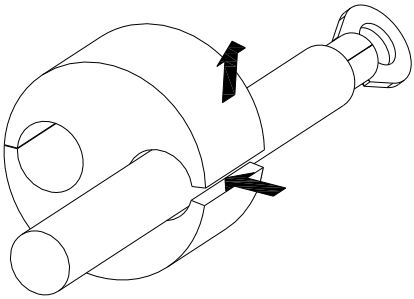

Figure 5.20

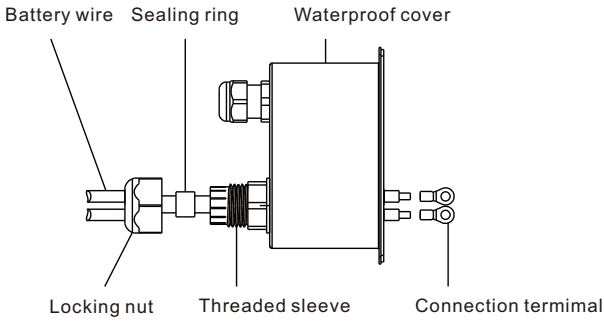

Figure 5.21

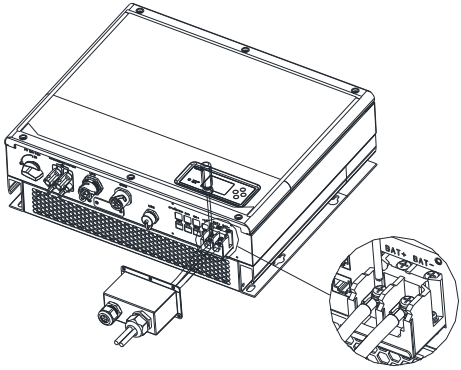

Figure 5.22

Note: It is suggested that the distance between the battery and the SPH be no longer than 1.5 m, and the power cable specification be greater than 5 AWG.

5.4.5 Connection of CT terminal

There is a CT in SPH inverter monitoring the power consumption situation of residential users, the CT terminal connection steps are as follows:

1. Unscrew the swivel nut from the cable gland.
2. Thread the swivel nut over the "CT" cable.
3. Press the cable support sleeve out of the cable gland.
4. Remove the filler plug from the cable support sleeve.
5. Route the "CT" cable through an opening in the cable support sleeve.
6. Thread the "CT" cable through the cable gland.
7. Insert the RJ45 plug of the network cable into the "CT1/METER1" connector on the inverter until it snaps into place.
8. If no other cables need to be installed, lock the waterproof cover to the inverter with screws.
9. Screw the swivel nut onto the waterproof cover.

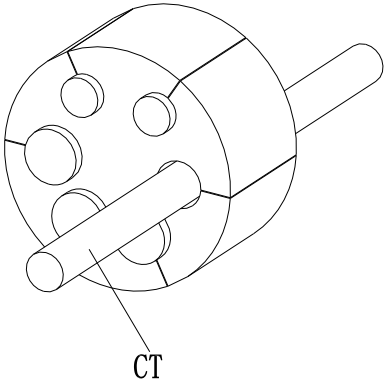

Figure 5.23

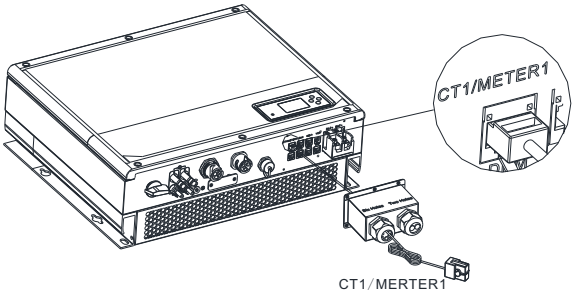

Figure 5.24

Note:

1. The meter and CT cannot be installed at the same time. Please set the sensor model when selecting CT or electric meter. For details, please refer to Section 6.3.3.
2. If the cable is not used, e.g. the CT cable, please do not remove the filler plug from the cable support sleeve.

Note:

The standard LAN cable is 15 m in length with the RJ45 connector at both ends (one end connected to the
meter and the other connected to the inverter). If the cable is not long enough, you can extend the cable to a length of up to 25 m. Please refer to the figure below:

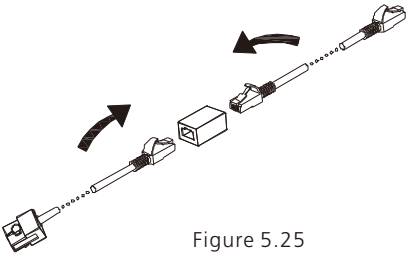

Figure 5.25

During the actual operation, please pay attention to the installation of current transformer as the diagram shows below:

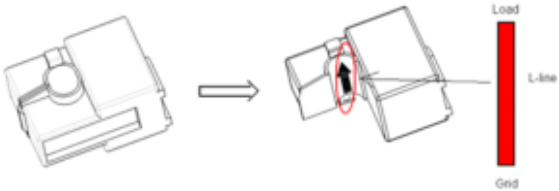

Figure 5.26

As illustrated above, open the current transformer and you can see an arrow labeled on it indicating the direction of current. Put the live wire among the under-detection wires onto the current transformer. After latching the current transformer, the installation has been finished.

Notice:

The direction (from K to L) of the arrow on the current transformer is corresponding to the direction of the current in live wire from Grid to Load. Sensor needs to be placed in the power distribution cabinet.

5.4.6 Connecting the meter terminal

If you have selected the meter to monitor the energy flow. Please proceed as follows to connect the meter:

1. Connect the LAN cable with the RJ45 connector, referring to Section 5.2.
2. Thread the swivel nut over the LAN cable.
3. Press the cable support sleeve out of the cable gland.
4. Remove the filler plug from the cable support sleeve.
5. Route the LAN cable through an opening in the cable support sleeve.
6. Thread the LAN cable through the cable gland.
7. Insert the RJ45 plug of the network cable into the "CT1/METER1" connector on the inverter until it snaps into place.
8. If no other cables need to be installed, lock the waterproof cover to the inverter with screws.
9. Screw the swivel nut onto the waterproof cover.

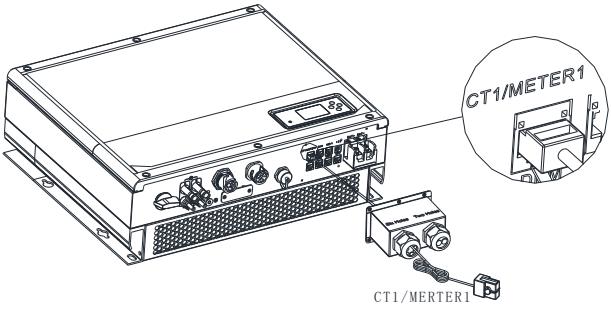

Figure 5.27

Note:
1. The meter and CT cannot be installed at the same time. Please set the sensor model when selecting CT or electric meter. For details, please refer to Section 6.3.3.
2. The meter must be purchased from . Meters of other brands would fail to communicate with the SPH inverter.
3. For details about wiring the meter, please refer to the User Manual of the meter.

Information	The position of export limitation CT or Meter must between the Inverter & Load and grid.

This series inverter has integrated export limitation functionality. To use this function, you can connect smart meter or CT.

5.4.7 Connecting to the CAN port for communication with the lithium battery

To communicate with the lithium battery via CAN communication, please proceed as follows to connect to the CAN port:

1. Unscrew the swivel nut from the cable gland.
2. Thread the swivel nut over the "CAN" cable.
3. Press the cable support sleeve out of the cable gland.
4. Remove the filler plug from the cable support sleeve.
5. Route the "CAN" cable through an opening in the cable support sleeve.
6. Thread the "CAN" cable through the cable gland.
7. Insert the RJ45 plug of the network cable into the "CAN" connector on the inverter until it snaps into place.
8. If no other cables need to be installed, lock the waterproof cover to the inverter with screws.
9. Screw the swivel nut onto the waterproof cover.

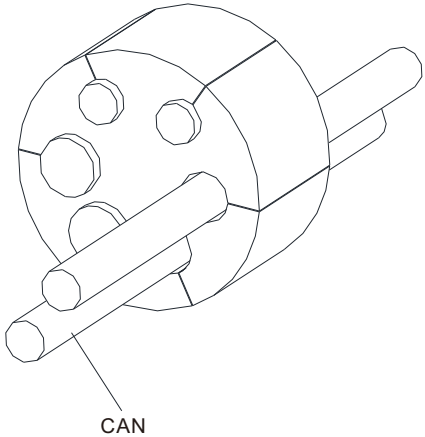

Figure 5.28

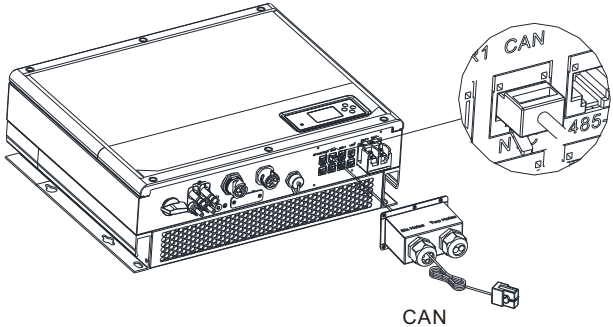

Figure 5.29

Note:

1. If you are using a lead-acid battery, you do not need to install this communication cable.
2. The CAN battery communication and 485-2 battery communication can't be installed at same time, please select the correct communication method according to the battery manual.
3. If the cable such as “485-2” cable or “CAN” cable is not used, please do not remove the filler plug from the cable support sleeve.

5.4.8 Connection of communication terminal for lithium battery (RS485)

When using lithium batteries which need to connect to the BMS system of the battery, connect lithium battery terminal (RJ45) as follows:

1. Unscrew the swivel nut from the cable gland.
2. Thread the swivel nut over the “RS485” cable.
3. Press the cable support sleeve out of the cable gland.
4. Remove the filler plug from the cable support sleeve.
5. Route the “RS485” cable through an opening in the cable support sleeve.
6. Thread the “RS485” cable through the cable gland.
7. Insert the RJ45 plug of the network cable into the “RS485-2” connector on the inverter until it snaps into place.
8. If no other cables need to be installed, lock the waterproof cover to the inverter with screws.
9. Screw the swivel nut onto the waterproof cover.

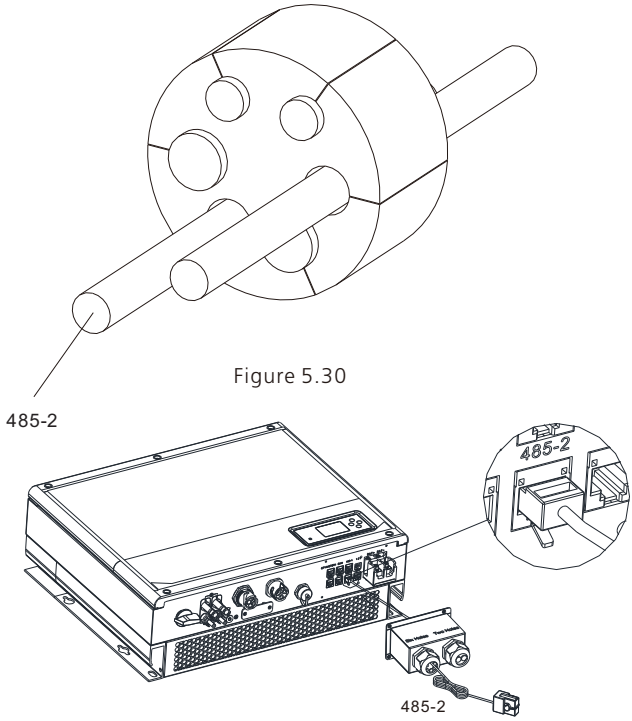

Figure 5.30

Figure 5.31

Note:

1. If you are using a lead-acid battery, you do not need to install this communication cable.
2. The CAN battery communication and 485-2 battery communication can't be installed at same time, please select the correct communication method according to the battery manual.
3. If the cable such as “485-2” cable or “CAN” cable is not used, please do not remove the filler plug from the cable support sleeve.

5.4.9 Connecting the DRMS terminal

If the SPH inverter is commissioned in Europe, the DRM port should be connected. Please take the following steps to connect to the DRM port:

1. Unscrew the swivel nut from the cable gland.
2. Thread the swivel nut over the "DRMS" cable.
3. Press the cable support sleeve out of the cable gland.
4. Remove the filler plug from the cable support sleeve.
5. Route the "DRMS" cable through an opening in the cable support sleeve.
6. Thread the "DRMS" cable through the cable gland.
7. Insert the RJ45 plug of the network cable into the "DRM" connector on the inverter until it snaps into place.
8. If no other cables need to be installed, lock the waterproof cover to the inverter with screws.
9. Screw the swivel nut onto the waterproof cover.

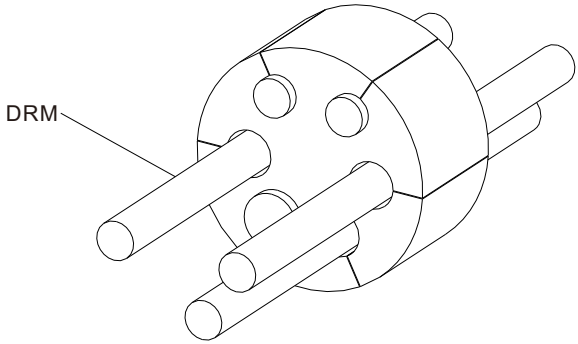

Figure 5.32

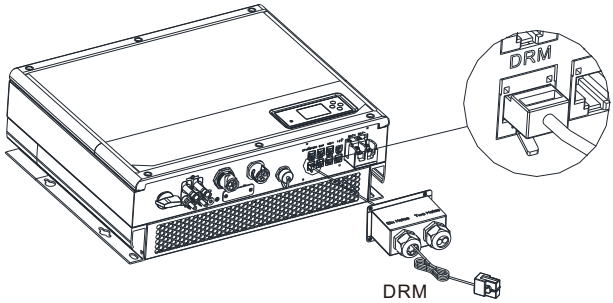

Figure 5.33

If the SPH is commissioned in Europe, the DRMS port should be connected.

PIN	DRMs Power Control	Description
1	DRM5	0%
2	DRM6	30%
3	DRM7	60%
4	DRM8	100%
5	Ref/Gen	/
6	COM/DRM0	standby
7	/	standby
8	/	standby

Note:
1. The DRMS function can only be used in the Load First mode.
2. For the following grid code, only DRM5 is supported:
SA_AUSTRIA, SA_POLAND, SA_SWEDEN, SA_DEMARK_DK1, SA_DEMARK_DK2, SA_VDE0126, SA_FRANCE, SA_HUNGARY, SA_SPAIN, SA_GREECE_CONTINENT

*Method of asserting Demand Response Mode

MODE	Rj45 socket asserted by shorting the following pins		Requirement
DRM0	Pin5	Pin6	Operate the disconnection device
DRM5	Pin1	Pin5	Do not generate power
DRM6	Pin2	Pin5	Do not generate at more than 30% of rated power
DRM7	Pin3	Pin5	Do not generate at more than 60% of rated power and sink reactive power if capable
DRM8	Pin4	Pin5	Increase power generation (subject to constraints from other active DRMs)

5.4.10 Connecting the dry contact port

The dry contact is used to communicate with external devices (such as remote start of the water heater). The wiring steps are as follows:
1. Unscrew the swivel nut from the cable gland.
2. Thread the swivel nut over the cable.
3. Press the cable support sleeve out of the cable gland.
4. Remove the filler plug from the cable support sleeve.
5. Route the network cable through an opening in the cable support sleeve.
6. Thread the network cable through the cable gland.
7. Thread cables into connection terminal of the inverter, then press the terminal withrelevant tools and make sure cables are securely connected.
8. If no other cables need to be installed, lock the waterproof cover to the inverter with screws.
9. Screw the swivel nut onto the waterproof cover.

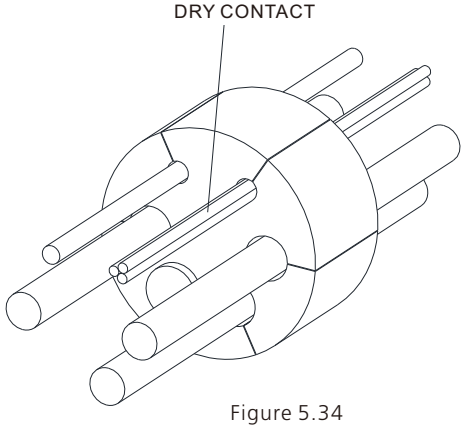

Figure 5.34

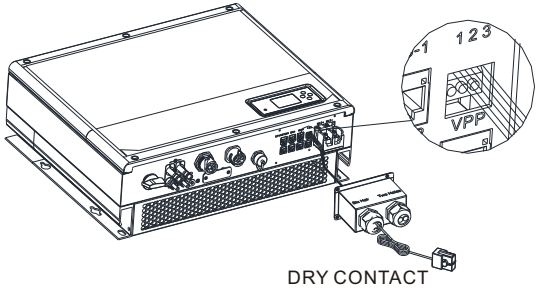

Figure 5.35

Note:
1. If the cable is not used, e.g. the dry contact cable, please do not remove the filler plug from the cable support sleeve.
2. The dry contact can provide a source output of 12 V and less than 200 mA to the driver replay and others. Please be aware of the output power.

5.4.11 Grounding the inverter

The SPH must be grounded properly with the grounding cable. The ground point is showed below. The specification of the grounding cable should be greater than 10AWG.

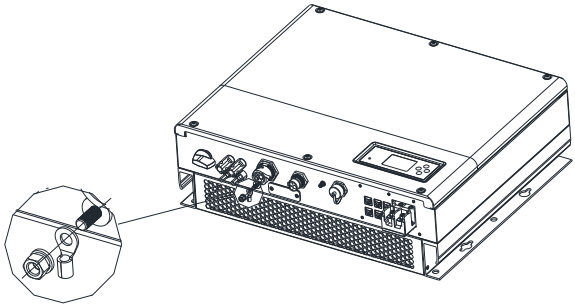

Figure 5.36

Grounding the PV array

The grounding conductor of the PV panel racking must be firmly grounded on the PV array side, inverter side and battery side. The cross-sectional area of the grounding conductor should be the same as that of the DC grounding conductor. The minimum wire size is 10 WAG.

DC grounding

Please select the DC grounding method, the PV grounding junction box, and the DC grounding wire size according to local standards.

Grounding device

If the positive or negative pole of the PV array in the PV system needs to be grounded, the inverter output should be insulated with an isolation transformer. The isolation transformer shall comply with IEC 62109-1, -2.

The connections are as follows:

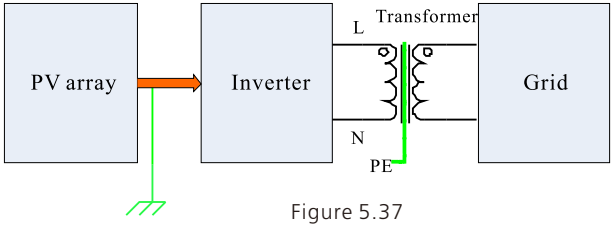

Figure 5.37

WARNING	1. SPH &SPH TL BL-UP series inverters are all single-phase inverters, If the inverter is installed in Australia or New Zealand the inverter must not be used as part of a three-phase combination 2. This inverter complies with IEC 62109-2 clause 13.9 for earth fault alarm monitoring. If an Earth Fault Alarm occurs,the fault code "Error303,NE abnormal" will be displayed on the inverter screen while the LED indicator red will light up.(Applicable to inverters with graphical display only)

6 Commissioning

6.1 Commissioning the SPH

Upon completion of installation and electrical connection, power on the SPH system in the following steps:

1. Connect the PV side
2. Connect the AC side
3. Connect the battery side
4. Turn on the AC breaker
5. Finally, turn on the PV side
6. Last turn on PV

If PV Grid and battery are available, system would work on the “normal” mode. When SPH works normally, the screen displays "normal" and the LED is green. If SPH not enter normal mode successful, especially the LCD is red, you need to check below:

1. Make sure all the connection is correct.
2. All the external switches are on.
3. Inverter built -in switch is on.
4. Make sure the lithium battery is on.
5. Refer to Part 9.1 for correction.

You can refer to Part 6.3.4 for work mode setting, then configure monitor, finish commissioning lastly.

6.2 Operation modes

6.2.1 Normal mode

In normal mode, the SPH can operate in the on-grid mode, or supply backup power during a grid outage.

On-grid mode

Load first: the default mode. In this mode, the solar power is prioritized to power the loads. When the solar power is insufficient, the battery will discharge to support the loads. If the solar power is sufficient, the surplus power will be directed to the battery. If no battery is connected or the battery has been fully charged, any further surplus energy will be fed to the grid (expect that the export limitation is enabled).

Battery first: In this mode, the power is prioritized towards charging the battery. It is recommended to select this mode during low electricity price periods. You need to set the ON and OFF time of each period, the charge cutoff SOC and the charge power, which should not be greater than the battery maximum input power. If the AC Charging (charge from grid) function is disabled, the SPH will charge the battery with solar power as a priority. If enabled, the SPH will charge the battery will both the solar power and the power drawn from the grid.

Grid first: In this mode, the solar power and the battery energy will be fed to the grid first. You are advised to choose this mode during high electricity price periods. You need to set the ON and OFF time of each period, the discharge cutoff SOC and the discharge power, which should not be greater than the battery maximum output power.

Bypass mode

When the SPH is only connected on the AC side with no connection to the battery and the PV panel, the SPH can be powered on and it will enter the Bypass mode.

Backup mode
In the event of a grid anomaly or grid outage, the inverter will switch to the backup mode, supplying power to critical loads with the battery and PV energy via the EPS output. You can disable the backup function following instructions in Section 6.3.4. If the PV power or the battery energy is loss, the other energy source should supply power. Please note that the maximum output power of the SPH in backup mode is 4000 W. Therefore, the load power connected to the EPS output port should be less than 4000 W.

Note:
Users can set only one period for Battery first or Grid first working mode on the LCD screen.
If you want to charge battery from grid, you need to enter the password on the LCD screen and set AC CHG to "Enable".

6.2.2 Fault mode

The SPH's smart management system monitors the system in real time. In case that any exception is detected, such as a system fault or an inverter fault, the LCD screen will display the fault information with the LED indicator turning red.

Note:
1. For detailed fault description, please refer to Section 9.1.
2. Some fault information is in order to remind users that might have some faults occurred in inverter side.

6.2.3 Programming mode

In the Programming mode, the SPH is updating and it is not allowed to cut out the power during the update process. The SPH will switch to the normal mode once the upgrade is complete.

6.2.4 Checking mode

Before the SPH enters the normal mode, the inverter will perform self-check. Once all tests are passed, the system will enter the normal mode; otherwise, it will enter the fault mode.

6.2.5 Standby mode

The SPH enters the standby mode when no fault has been detected while the operating requirements are not met.

6.2.6 Shutdown mode

To shut down the SPH, you need to disconnect all energy sources and the SPA will enter the shutdown mode automatically.
Steps to shut down the SPH:
Shutdown the PV side
Turn off the battery switch.
Disconnect the AC power source. Wait until the LED indicator and the LCD screen of the SPH turn off.

Note:
After powering off the equipment, the residual voltage and heat still exist. Therefore, wait for over 5 minutes before performing any operation.

6.3 Display and button

6.3.1 LCD display area

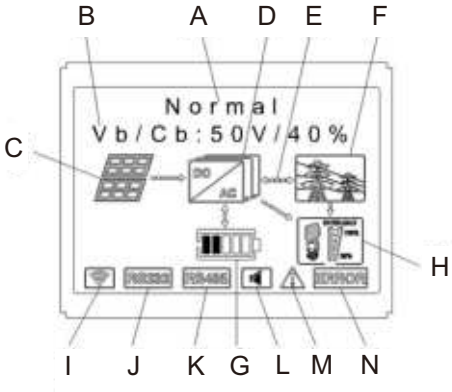

Figure 6.1

Location	Description
A	Inverter status
B	Basic information
C	PV input (If you connect two tracks, it will show two. Otherwise show one)
D	SPH inverter
E	Power flow line
F	Grid
G	(display SOC with five bars, and each bar represents 20%)
H	Local load
I	Wireless communication
J	RS232
K	RS485
L	Buzzer (reserved)
M	Warning
N	Fault

6.3.2 LED and button instruction

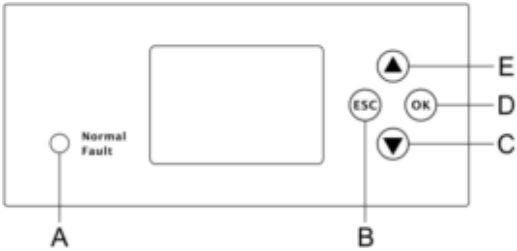

Figure 6.2

Location	Description
A	Status indicator
B	ESC key (Cancel)
C	Down
D	Enter
E	Up

Note:
The LED indicator denotes the operating status of the SPH with two colors - green and red. For details, please refer to Section 3.1.

6.3.3 LCD display

The LCD display demonstrates the operating status of the inverter, the basic information and the fault information.
It also allows users to set the language, charging/discharging priority and the system time. The LCD screen displays the information in turn.

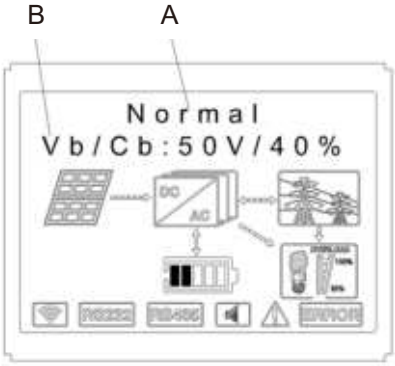

Figure 6.3

Line A display:
Standby: the SPH is in standby mode. No fault is detected, but the operating requirements are not met.
Normal: the SPH is operating properly.
Checking: the SPH is performing self-check. If no fault is detected, it will switch to the normal mode; otherwise, it will switch to the fault mode.
Programming: the SPH is upgrading the firmware
Fault: once a fault is detected, the SPH will be shut down to protect the device.

Line B display:
In normal mode, the LCD screen lights up automatically. You can press the "Up" button to access the setting menu. Please refer to the chart below:

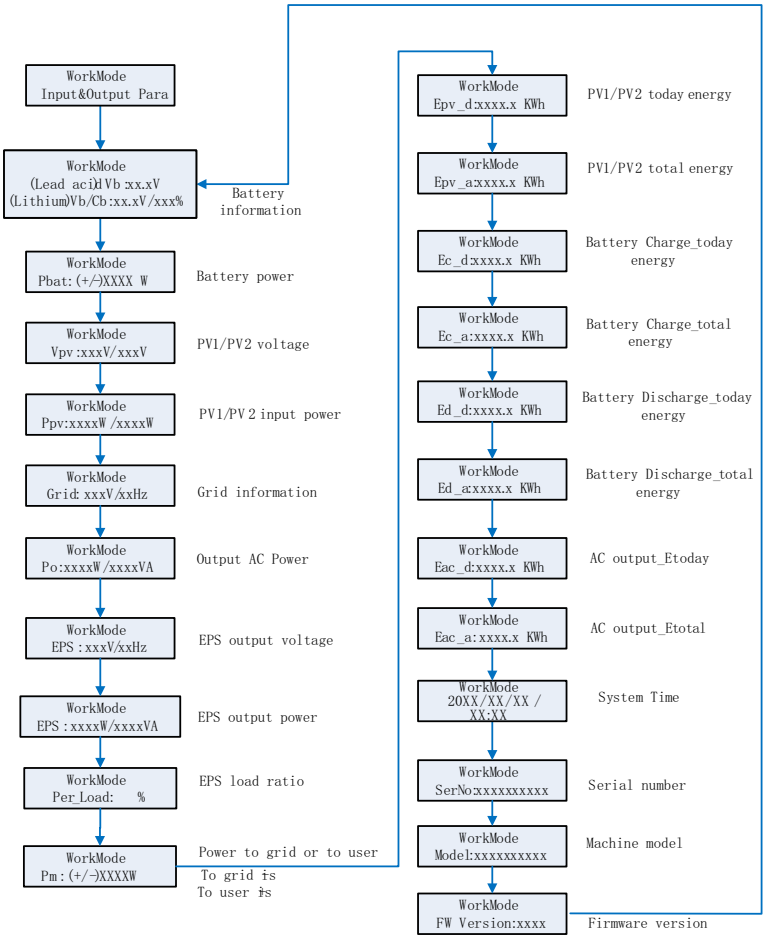

Chart 6.4

Note:
Press "Down" to move to the next item, and "Up" to the previous one.
The work mode is displayed in accordance with the actual operating status.
Vb refers to the voltage of battery. Pm means the monitoring power.

6.3.4 Setting the working mode

Keep pressing "enter "for 3S, you can enter set up surface, in the set up surface you need hold button Enter or ESC 1S for selection, you can see the surface as showing below.

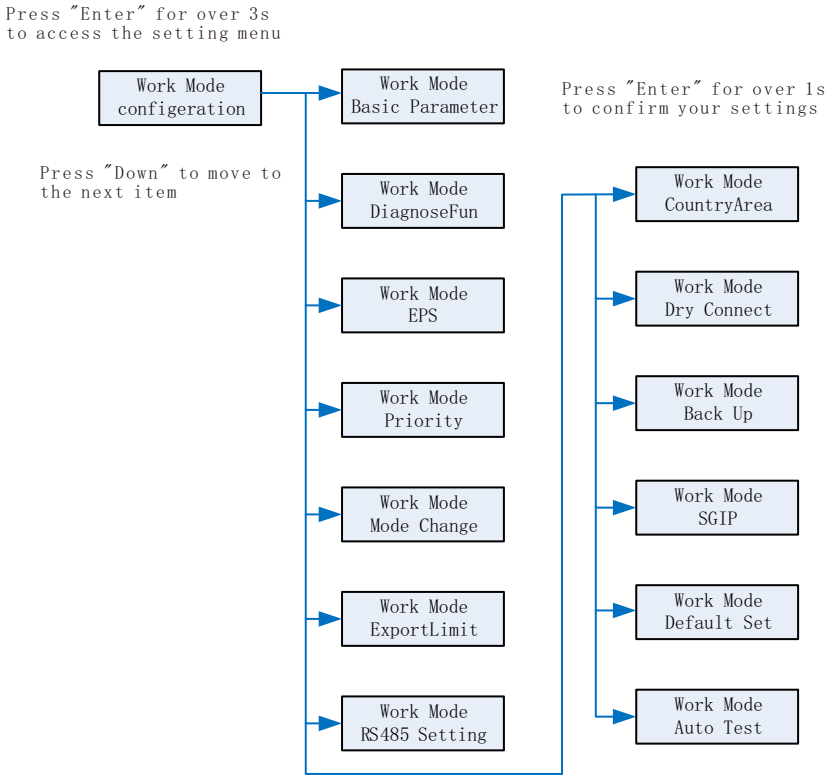

Chart 6.5

For inverters to be commissioned in Italy with the grid code of CEI, the Auto Test is required. For details, please refer to the Appendix.

In the "Basic Parameter" menu, you can press "Enter" for over 1s to access the setting menu:

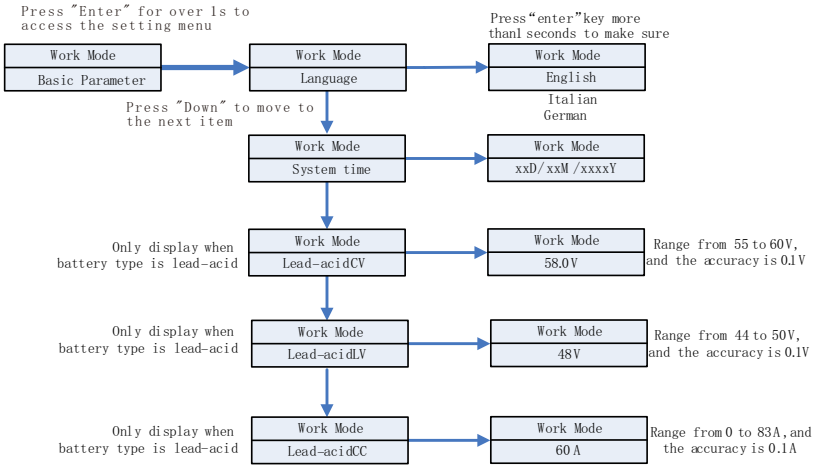

Chart 6.6

In the Basic Parameter, you can set language (English, Italian, German), system time, lead-acid cell charging voltage (58V by default), discharge low voltage (48V by default) and lead-acid constant current (60A by default).

Set the Low Voltage (LV) and Constant Voltage(CV) of the lead-acid battery according to different regions. During high-power discharge, it will stop discharging when the LV reaches the level of the preset value minus 4V.

2.Under the EPS, you can see the setup flow chart below after pressing Enter for 1S:

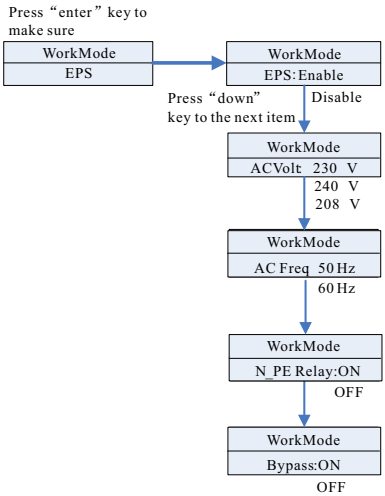

Chart 6.7

In the EPS you can set, including enable or disable (default is enable), AC voltage(default is 230V) and frequency (default site 50HZ).

Note:

1.When EPS Disable & Bypass: OFF, there is no output at the EPS port under any circumstances;
2.When EPS Enable & Bypass: OFF, the EPS port has no output when there is power grid, and the EPS port has output when there is no power grid, and the load needs to be switched through ATS;
3.When EPS Disable & Bypass: ON, the EPS port has output when there is power grid, and the EPS port has no output when there is no power grid;
4.When EPS Enable & Bypass: ON, there is output at the EPS port under any circumstances(The normal working mode of EU models).

3.In the "Priority" menu, you can press "Enter" to access the setting menu:

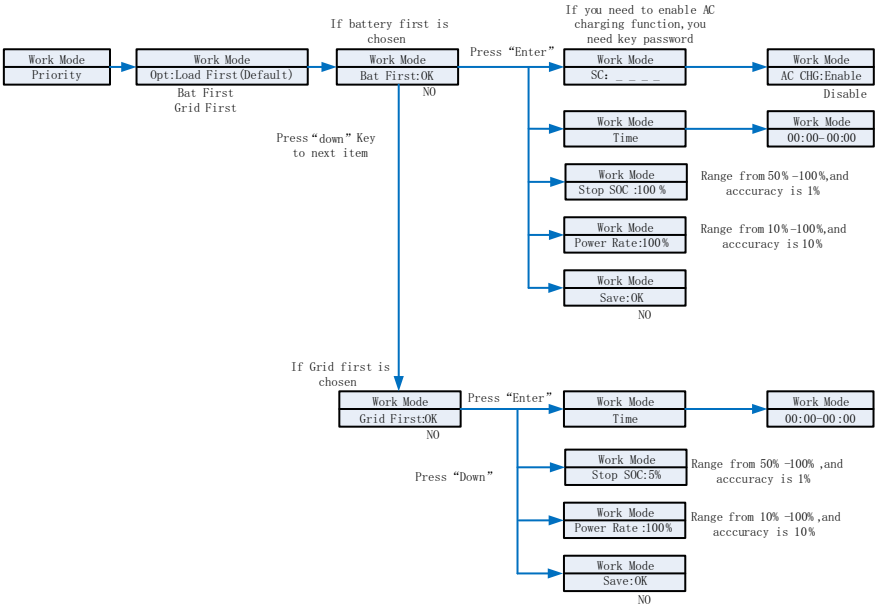

Chart 6.8

Note:

1. "Power Rate" is used to set the power of the battery. The battery power varies based on the battery type. Therefore, please check the maximum power of the battery you selected.
2.Time setting range is 24 hours. If the end time is less than the start time, the time-span crosses midnight.
3. In "Mode Change", you can press "Enter" to access the setting options:

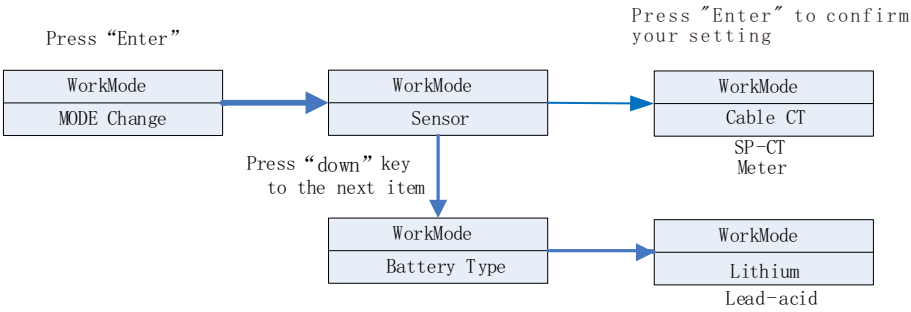

Chart 6.9

The MODE Change includes two setting items: Sensor and Battery Type. For Sensor, you can select cable CT (by default), meter or SP-CT(wireless RF transfer). For Battery Type: you can choose lithium battery or lead-acid battery.

4.In the "ExportLimit (Export Limitation)" menu, you can press "Enter" to access the setting menu:

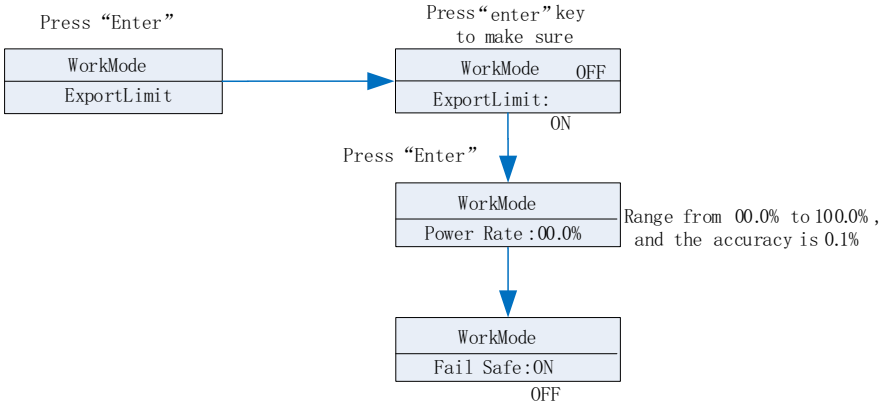

Chart 6.10

Export limit is used for users to control the energy flowing to the grid. If this function is enabled, power feeding to grid will be equal or less than the setup value.
The purpose of the Fail Safe function is to ensure that should any part of the ELS fail, the Active Power exported across the Connection Point will drop to the Agreed Export Capacity or less within the specified time.

Note: 1. Default value is 00.0%.
2. Fail safe works only in meter mode.

5. In the "Default" menu, you can press Enter to access the setting menu:

Chart 6.11

"Default set" means that all predefined parameters will be restored to the default value. Please be cautious not to accidentally choose factory reset.

6. Under the RS485 setting, you can choose RS485 communication mode after pressing Enter:

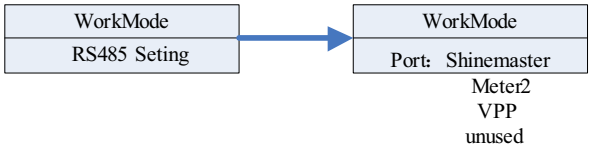

Chart 6.12

Note:
• Default mode is unused.
• In ShineMaster mode, SPH will enter parallel mode. At this time, it needs to be equipped with SEM-E and does not need to be connected to the meter.
• In Meter2 mode, SPH allows two meters to be connected. One is used to read the bus power, and the other is used to read the power of other inverters.
• In VPP mode, SPH allows access to external controllers to make relevant settings for SPH.

7. Under the Dry Connect setting, you can control the working hours of external water heaters, diesel generators and other equipment by setting SPH after pressing Enter:

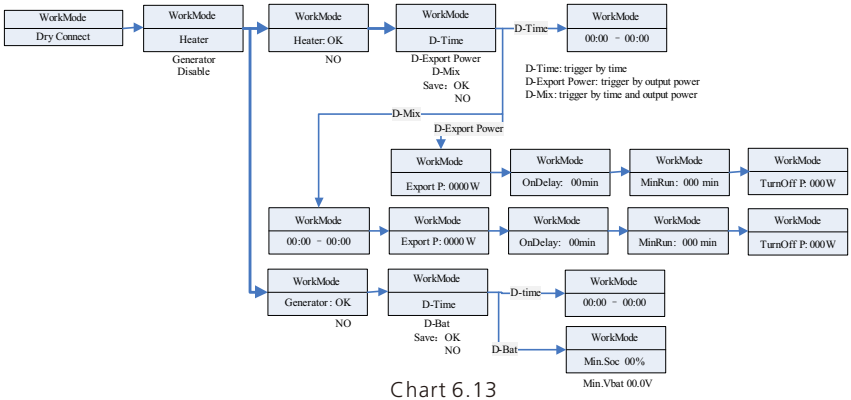

Chart 6.13

Note:
• The D-Bat setting item in the generator option will display different parameters according to the type of battery connected. Min.SOC will displayed when a lithium battery is connected, and Min.Vbat when a lead-acid battery is connected.

6.3.5 Single-phase export limitation configuration

6.3.5.1 Setting procedure

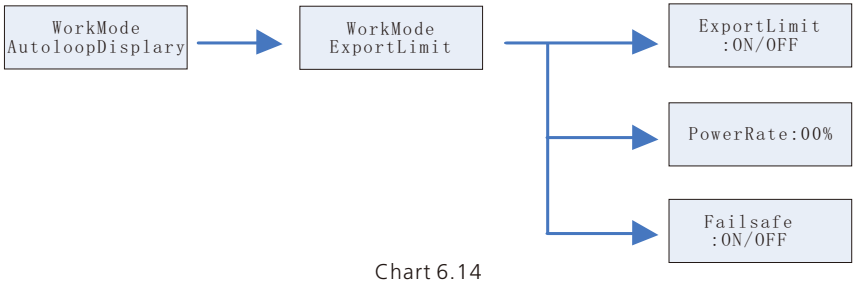

Chart 6.14

6.3.5.2 Setting guide

(1) Long press “enter” to access the "WorkMode" configuration page from the home page for operating mode settings.
(2) Press “down” 5 times, or press "up" (4 times for single-phase, 5 times for three-phase) to access the "ExportLimit" page for export limitation settings.
(3) The first setting item is "ExportLimit", press “enter” once to enter the editing mode.
(4) Press “up” or ”down” to change the selected option, and set it to "ON".
(5) Press "enter" once to confirm your setting and exit the editing mode.
(6) Press “down” once, and go to the next item to set "SingleExport" to ON to enable independent export limitation for each phase.
(7) Press “enter” once to enter the editing mode.
(8) Press "up" or "down" key to change the selected option and set it to "OFF".
(9) Press "enter" once to confirm your setting and exit the editing mode.
(10) Press “down” once to go to the next item to set the "PowerRate" – limited feed-in power in percentage.
(11) Press “enter” once to enter the editing mode.
(12) Press "up" or "down" key to set it to the desired value.
(13) Press "enter" once to confirm your setting and exit the editing mode.
(14) Finally, press "Esc" to exit settings.

6.4 Communication

6.4.1 The USB port

The USB port is used for firmware upgrade. With the USB flash drive, you can update the software. Please refer to the figure below:

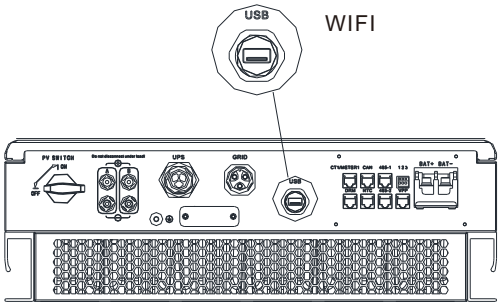

Figure 6.15

Note:
The USB port is only used for firmware update & system monitoring. Do not use it for charging..

6.4.2 Monitoring

You can monitor the SPH operating status via connecting to the RS485 communication port on the SPH.

Note:
To view detailed monitoring information, you can log into the ShineServer webpage or the ShinePhone APP. The ShineWi-Fi-X or ShineLink can be connected to the inverter via the USB port.

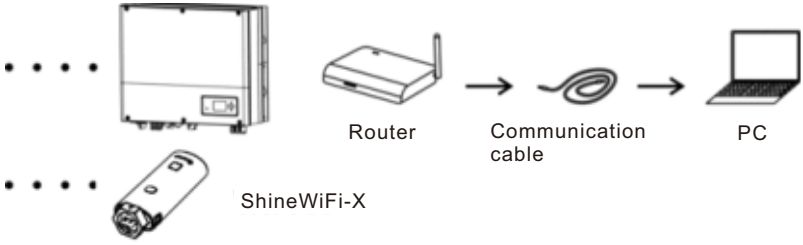

Figure 6.16

The USB collector is connected:

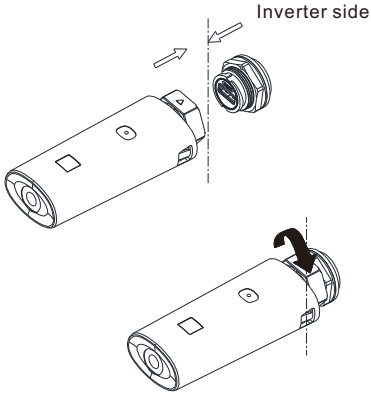

Figure 6.17

Wwhether a WiFi-X/ShineLink-X is used, you can access the remote monitoring system. Scan the QR ode on the datalogger to download the APP, and setup the monitoring system as prompted. For details, please refer to the manual of the datalogger.

Note:
In case that the SPH is powered on for the first time with the ARK battery after connecting the datalogger, no monitoring data is available in the first 20 minutes as the SPH is communicating with the battery and uploading the battery SN number.

The 485-1/485-2 port
485-1/485-2 port is the extended 485 interface on SPH, which needs to be used in conjunction with the RS485 Setting in the LCD menu to communicate with external devices.

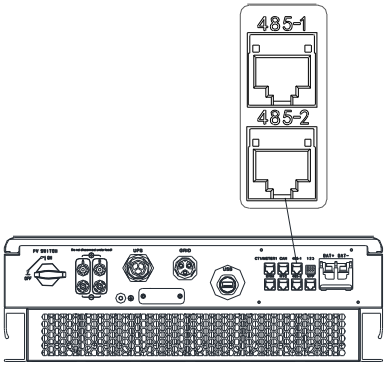

Figure 6.8

The SPH inverters can be connected in parallel. For details, please refer to the ShineMaster User Manual. When set to Meter2 mode, the wiring diagram is as follows:

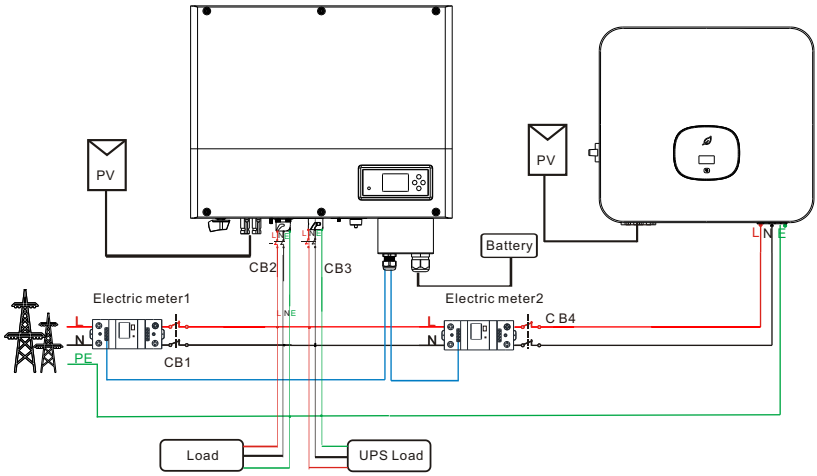

Figure 6.19

As the host, SPH will receive information from two meters at the same time: the first meter (the original SPA meter) needs to be connected to the grid-side bus, and the communication line is connected to the Meter port; the second meter needs to be connected to the output of the inverter terminal, the communication line is connected to 485-1/485-2 port.

When set to VPP mode, the wiring diagram is as follows:

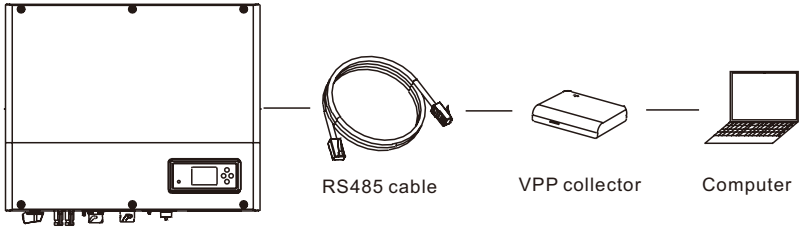

Figure 6.20

The external VPP collector is connected to the 485-1/485-2 port with a network cable. Once the communication is successfully established, the SPA will respond to the instructions issued by the VPP.

6.5 Country setting

6.5.1 Selecting the country standard

inverters have been designed to comply with relevant safety standards of different country. in the SPH TL BL-UP series, you can select the corresponding country standard on the LCD screen.

6.5.2 Guidance on selecting the country standard for SPH TL BL-UP series inverters

Press "Up" or "Down" to view different options
Press "OK" to confirm your setting.
The password is 1111.

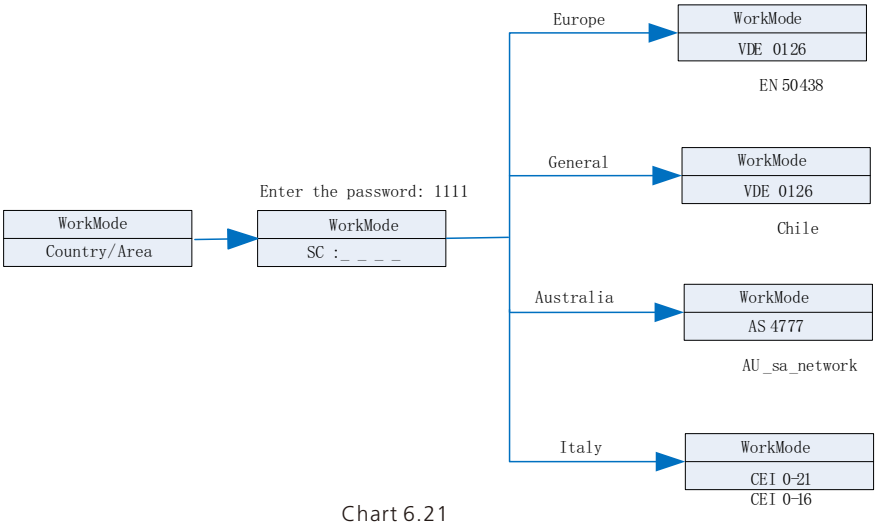

Chart 6.21

DANGER	Before setting the national safety standards on the LCD, turn off the AC breaker while keeping on the battery powered on.
	Caution: You need to calibrate the time that the machine is showing after the inverter starts up. If the country is set incorrectly, please shut down the inverter and set again.

6.5.3 Country standard table

Contry/region	Regulation display	Model display
EU model	VDE0126	GT0XXXXXX1
	Germany	GT0XXXXXX7
	VDE-AR-N4110	(NULL)
	Belgium	GT0XXXXXXD
	Poland	GT0XXXXXXB
	France	GT1XXXXXX9
	Spain	GT1XXXXXX0
	Austria	(NULL)
	Denmark_DK1	GT1XXXXXX7
	Denmark_DK2	GT1XXXXXXB
	Sweden	GT1XXXXXX6
	Norway	(NULL)
	Switzerland	(NULL)
	Bulgaria	(NULL)
	Greece	GT0XXXXXX6
	Estonia	(NULL)
	EN50549	GT1XXXXXXD
	EN50438	(NULL)
General model	VDE0126	GT0XXXXXX1
	TUNISIA	(NULL)
	Ukraine	(NULL)
	VDE-AR-N4105	GT0XXXXXX7
	IEC62116&61727	GT0XXXXXXC
	South Africa	GT1XXXXXXC(NULL)
	Dubai	(NULL)
	Chile	(NULL)
	Argentina	(NULL)
	Uruguay	(NULL)
	Others	(NULL)

Contry/region	Regulation display	Model display
Italy	CEI 0-21	GT0XXXXXX4
	CEI 0-16	(NULL)
Hungary	Hungary	GT0XXXXXXC
UK	G98	GT0XXXXXX8
	G99	GT0XXXXXX5
	Ireland	GT1XXXXXX3
	NI_G98	GT2XXXXXX4
	NI_G99	GT2XXXXXX5
Australia	AS4777	GT4XXXXXX3
	NewZealand	GT5XXXXXX8
	Queensland	GT4XXXXXX2
	AU_Victoria	GT4XXXXXX1
	AU_Western	GT4XXXXXX4
	AU_Horizon	GT4XXXXXX5
	AU_Ausgrid	GT4XXXXXX6
	AU_Endeavour	GT4XXXXXX7
	AU_Ergon_Energy	GT4XXXXXX8
	AU_Energex	GT4XXXXXX9
	AU_sa_network	GT4XXXXXXA
Brazil	Brazil	GT1XXXXXX5(NULL)
	Brazil 240V	(NULL)
Mexico	Mexico	(NULL)
India	India	GT1XXXXXX4(NULL)
Korea	Korea	(NULL)
Taiwan	Taiwan VPC	GT1XXXXXX2(NULL)
	Taiwan TPC	(NULL)
Thailand	MEA	GT0XXXXXXE
	PEA	GT0XXXXXXF
Vietnam	Vietnam	(NULL)
CQC	CQC	GT0XXXXXXA
	CQC_1	GT1XXXXXX1

6.5.4 Checking the firmware version, region, country/area and power quality response mode

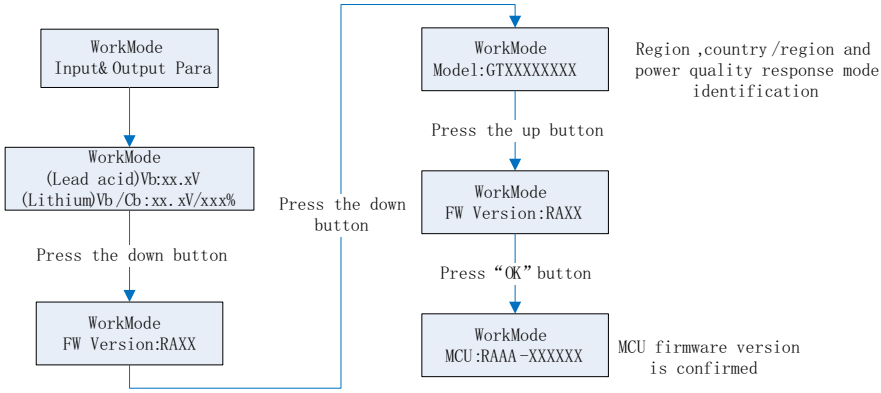

Chart 6.22

7 Powering on/off the SPH system

7.1 Powering on the SPH system

Users can start up SPH inverters through following steps:
1. Connect to PV
2. Connect to the grid.
3. Connect to the battery.
4. Turn on the AC circuit breaker and then the battery switch.
5. If the LED indicator turns green, it indicates that the SPH inverter has been successfully powered on.

7.2 Powering off the SPH system

1. Turn off all circuit breakers and switches.
2. Disconnect PV
3. Disconnect the inverter.
4. Disconnect the battery.
5. Disconnect the AC connector.
6. Wait until the LED indicator and the LCD display go off, indicating that the SPH has been completely powered off.

Notes on the installation environment, 8 maintenance and cleaning

Heat dissipation performance is important when the SPH works in high-temperature environment. Proper heat dissipation can help to reduce the failure rate of SPH due to excessive heat. The SPH inverter adopts natural cooling with the heat dissipated from the top of the heat sink. The battery paired with the inverter is protected to IP65. Ensure that the temperature is within the permissible range for both the inverter and the battery.
When using the battery, please pay attention to the following things:
Caution: Do not dispose of batteries in a fire. The batteries may explode.
Caution: Do not open or damage batteries. Released electrolyte is harmful to the skin and eyes. It may be toxic.
Caution: A battery can present a risk of electrical shock and high short-circuit current. The following precautions should be observed when working on batteries:

- Remove watches, rings or other metal objects.
- Use tools with insulated handles.
- Wear rubber gloves and boots.
- Do not lay tools or metal parts on top of batteries.
- Disconnect charging source prior to connecting or disconnecting battery terminals.
- Determine if battery is inadvertently grounded. If inadvertently grounded, remove source from ground. Contact with any part of a grounded battery can result in electrical shock. The likelihood of such shock can be reduced if such grounds are removed during installation and maintenance (applicable to equipment and remote battery supplies not having a grounded supply circuit).

If the SPH fails to work properly due to over-temperature or under-temperature, please proceed as follows:

- Check if the air duct of the heat sink is properly installed. Choose an appropriate position before installation.
- Check if the battery temperature is excessively high. If so, you need to ensure proper ventilation and cool the battery down.
- Check if the battery temperature is lower than the specified threshold, which might initiate the low-temperature protection. The fault will disappear once the temperature is within the permissible range.

Note:

- Servicing of batteries should be performed or supervised by personnel knowledgeable about batteries and the required precautions.
- When replacing batteries, replace with the same type and number of batteries or battery packs.
- General instructions regarding removal and installation of batteries.
- In order to protect the safety of the operation of the system, the inverter needs to be regularly maintained and cleaned as follows.
- Check whether the grounding wire is loose.
- Whether the terminals are loose.
- Keep the metal housing of the inverter clean.

WARNING	Note: 1. Prior to removal of any cover for maintenance or repair, turn off the switch on the AC and DC sides. 2. All operations mentioned above should be performed by qualified and professional personnel. If you need to perform the operations mentioned above, you must ensure that the entire system is powered off.

9 Fault removal

9.1 Troubleshooting

products have gone through strict tests and inspections before delivery. As with all electrical devices, there are residual risks despite careful construction. Should you encounter any problems, you can visit to check the Q&A section or call our customer service line. We require the following information in order to provide you with the necessary assistance:

- Inverter serial number
- Inverter model
- Fault information on the LCD screen
- Brief introduction of the problem
- The battery voltage
- The grid voltage and frequency
- The manufacturer and model of the battery
- The capacity and wiring mode of the battery
- Purchase time of the battery and the use frequency
- Can you reproduce the problem?
- Has the problem occurred before?
- When did the fault occur?

9.2 System fault information list and troubleshooting suggestions

Warning Message		
Error Message	Description	Suggestion
Warning 401	SP-CT/Meter Communication fault	1. Check the wire connection between meter and inverter is good or not. 2. Check if the distance between SP-CT and inverter is within the specified range. 3. Restart inverter and SP-CT, reconnect.
Warning 203	PV1 or PV2 Circuit short	1. Check if the positive and negative poles of the PV input are reversed. 2. Reconnect the PV connectors. Please contact support if the problem persists.
Warning 506	Battery temperature out of specified range for charge or discharge	Check if the ambient temperature of the battery is beyond the specified range.
AC V Outrange	Grid voltage fault. Please refer to the local grid standard for more details of the grid voltage	1. Check if the AC voltage is within the specified range. 2. Check the grid connection.

Error Message	Description	Suggestion
AC F Outrange	Grid frequency fault. Please refer to the local grid standard for more details for the grid frequency	1. Check if the AC frequency is within the specified range. 2. Restart the inverter. 3. Contact support if the problem persists after restart.
PairingTime Out	Communication fault	1. Check if the distance between SP-CT and inverter is within the specified range. 2. Restart inverter and SP-CT, reconnect.
CT LN Reversed	LN Reversed	1. Check whether the L line and N line of SP-CT is reversed or not. 2. Check the connection of the SP-CT's PE wire.
BMS COM Fault	Communication fault	1. Check if the lithium battery has been turned on. 2. Check the connection between the lithium battery and the inverter.
Battery reversed	Battery terminals reversed	Check the polarity of the battery terminals.
Battery Open	Battery terminal open(only for lithium battery)	1. Check the battery connection. 2. Check if the switches between the battery and the inverter have been turned on.
Over Load	EPS output overload warning. If this warning occurred three times, the off-grid function will be locked for one hour.	Please reduce the load connected to the EPS output port.
No AC Connection	No Utility	1. Check if the grid goes down. 2. Check the grid connection. 3. Check if the switches have been turned on.
Output High DCI	High DC component in the output power. Please refer to the local grid standard for disconnection time when the output DC current is too high.	1. Restart the inverter. 2. Please contact support if the problem persists after restart.

Error Message	Description	Suggestion
Bat Voltage High	Battery Voltage higher than 60V	1. Check if the battery voltage is within the specified range. 2. Check the battery connection. If the actual battery voltage is higher than 560V, please disconnect the battery and check the inverter.
Bat Voltage Low	Battery Voltage lower than 42 V	1. Check if the battery voltage is within the specified range. 2. Check the connection between the battery and the inverter.
BMS Warning:XXX	BMS report warning	1. Check the warning information referring to the lithium battery user manual. 2. Please contact support if the problem persists after restart.
BMS error:XXX	BMS report error	1.Check the warning information referring to the lithium battery user manual. 2. Please contact support if the problem persists after restart.
EPS Volt Low	EPS output voltage low	1. Check the power of the load connected to the EPS output port. If overload occurs, please reduce the load. 2. Restart the inverter.

Error message		
Inverter fault code	LCD Display	Suggested measure
Error 300	AC V Outrange (1)	1. Check the grid voltage. 2. If the error message still exists despite the grid voltage being within the permissible range, please contact support.
Error 304	AC F Outrange	1. Restart the inverter. 2. If the error message still exists, please contact support.
Error 302	No AC Connection	1. Check the grid voltage. 2. If the error message still exists despite the grid voltage being within the permissible range, please contact support.
Error 604	EPS Volt Low	1. Restart the inverter. 2. If the error message still exists, please contact support.
Error 607	EPS Over Load	1. Restart the inverter. 2. If the error message still exists, please contact support.
Error 505	Battery reversed	1. Check battery terminals. 2. If the error message still exists, please contact support.
Error 506	Battery Open	1. Check battery terminals. 2. If the error message still exists, please contact support.
Error 502	Bat Voltage Low	1. Check battery voltage. 2. If the error message still exists, please contact support.
Error 503	Bat Voltage High	1. Check battery voltage. 2. If the error message still exists, please contact support.
Error 500	BMS COM Fault	1. Check the battery communication port. 2. If the error message still exists, please contact support.
Error 402	Output High DCI	1. Restart the inverter. 2. If the error message still exists, please contact support.
Error 203	PV Isolation Low	1. Check if the PV panel enclosure is properly grounded. 2. If the error message persists, please contact support.
Error 202	PV Voltage High	1. Disconnect the DC switch immediately and check the voltage. 2. If the DC input voltage is within the permissible range and the error message persists, please contact support.

Error message		
Inverter fault code	LCD Display	Suggested measure
Error 600	OP Short Fault	1. Restart the inverter. 2. If the error message still exists, please contact support.
PV1 short	Pv1 short	1. After shutdown, check is the PV panel is normal. 2. If the error message persists, please contact support.
PV2 short	PV2 short	1. After shutdown, check is the PV panel is normal. 2. If the error message persists, please contact support.
CT LN Reversed	CT LN Reversed	1. Check if the CT is properly connected. 2. If the error message still exists, please contact support.
Error 507	Over Load	1. Check if the load power is greater than the lithium battery rated power. 2. If the error message still exists, please contact support.

Decommissioning 10

10.1 Removing the SPH inverter

1. Disconnect all electrical connections from the inverter, including the RS485 communication cable, DC input cables, AC output cables, battery cables, and the grounding cable.

Be aware of the residual heat on the SPH enclosure to avoid body burns.
Wait 20 minutes for the SPH to cool down before removing it.

2. Remove the inverter from the mounting bracket.
3. Put away the mounting bracket.

10.2 Package and transport SPH inverter

If the original package is available, please place the inverter in the original box and tie it with tapes.
If the original package is not available, please put the inverter in a carton box that is suitable for its dimensions and weight.

10.3 Storing the SPH inverter

Store the inverter in a dry place and keep the temperature between -25℃ and 60℃

10.4 Disposing of the SPH inverter

Do not dispose of the product together with the household waste but in accordance with the disposal regulations for electronic waste applicable at the installation site.

11 Product specification

11.1 SPH series inverter specification

Model / Specifications	SPH 3000TL BL-UP	SPH 3600TL BL-UP	SPH 4000TL BL-UP	SPH 4600TL BL-UP	SPH 5000TL BL-UP	SPH 6000TL BL-UP
Input data(DC)						
Max. recommended PV power(for module STC)	6500W	7500W	8500W	9000W	9500W	10600W
Max. DC voltage	550V	550V	550V	550V	550V	550V
Start voltage	120V	120V	120V	120V	120V	120V
Nominal voltage	370V	370V	370V	370V	370V	370V
MPP working voltage range	120V-550V	120V-550V	120V-550V	120V-550V	120V-550V	120V-550V
Full-load DC voltage range	275V-440V	275V-440V	275V-440V	340V-440V	340V-440V	340V-440V
Number of independent MPP trackers	2					
No. of PV strings per MPP tracker	1					
Max. input current per MPP tracker	13.5A					
Max. short-circuit current per MPP tracker	16.9A					
Backfeed current to the array	0A					
AC input / output data						
Rated input / output power	3000/3000 W	3680/3680 W	4000/4000 W	4600/4600 W	5000/5000 W	6000/6000 W
Rated output apparent power	3000VA	3600VA	4000VA	4600VA	5000VA	6000VA
Nominal AC voltage/range	230V ; 180Vac-260Vac	230V ; 180Vac-260Vac	230V ; 180Vac-260Vac	230V ; 180Vac-260Vac	230V; 180Vac-260Vac	230V ; 180Vac-260Vac
Nominal Frequency	50/60Hz					
Rated input / output current	13.5/ 13.5 A	16/16 A	17.5/17.5 A	20/20 A	22/22A	27/27 A
Max inrush peak current	10A(5ms)					

Specifications \ Model	SPH 3000TL BL-UP	SPH 3600TL BL-UP	SPH 4000TL BL-UP	SPH 4600TL BL-UP	SPH 5000TL BL-UP	SPH 6000TL BL-UP
Max. input / output current	16/16A	16/16A	22/22A	22/22A	22/22A	27/27A
Maximum output fault peak curren	65A (56μs)					
Maximum output over current protection	65A					
Phase factor at rate power	1					
Displacement power factor, configurable*	0.8leading…0.8lagging					
THDI	<3%					
AC connection	Single phase					
Stand alone(AC power)						
SPH &SPH TL BL-UP Rated output apparent power	3000VA	3680VA	4000VA	4000VA	4000VA	4000VA
Nominal voltage	230V					
Rated Frequency AC output	50/60Hz					
Rated output current	13A	16A	17.5A	17.5A	17.5A	17.5A
THDv	3%					
Switch time(SPH TL BL-UP))	≤10ms					
BAT data（DC）						
Battery voltage range	42~59V					
Minimum full load voltage	46V	48V	48V	48V	48V	48V
Rated charging and discharging current	66A	75A	85A	85A	85A	85A
Continuous charging / discharging power	3000/3000 W	3680/3680 W	4000/4000 W*1	4000/4000 W*1	4000/4000 W*1	4000/4000 W*1
Type of Battery	Lithium /Lead-acid					
Efficiency						
Max. efficiency	97.2%	97.2%	97.3%	97.4%	97.5%	97.6%

Specifications \ Model	SPH 3000TL BL-UP	SPH 3600TL BL-UP	SPH 4000TL BL-UP	SPH 4600TL BL-UP	SPH 5000TL BL-UP	SPH 6000TL BL-UP
Euro weighted efficiency	97%	97%	97.1%	97.1%	97.2%	97.2%
MPPT efficiency	≥99.5%					
Protection devices						
Safety level	Class II					
Overvoltage category	PV:II AC:III Others:I					
Ingress protection	IP65					
Inverter topology	Non-isolated					
Operating temperature range	–25°C … +60°C (-13…+140℉) with derating above 45°C /113℉					
Safety level	Class I					
Ingress protection	IP65					
DC switch	Integrated					
DC reverse-polarity protection	Integrated					
DC Surge protection	Type II					
Insulation resistance monitoring	Integrated					
AC surge protection	Type II					
AC short-circuit protection	Integrated					
Ground fault monitoring	Integrated					
Grid monitoring	Integrated					
Anti-islanding protection	Integrated (Active Frequency Drift)					
Residual-current monitoring unit	Integrated					
General Data						
Dimensions (W / H / D) in mm	565*456*188					
Weight	27kg					
Noise emission (typical)	≤ 25 dB(A)					
Altitude	2000m					

Specifications \ Model	SPH 3000TL BL-UP	SPH 3600TL BL-UP	SPH 4000TL BL-UP	SPH 4600TL BL-UP	SPH 5000TL BL-UP	SPH 6000TL BL-UP
Self-Consumption	< 10 W					
Cooling concept	Natural					
Relative humidity	100%					
Features						
DC connection	MC4/H4 (opt)					
AC connection	connector					
BAT connection	OT Terminal					
Display	LCD					
Interfaces: RS485/ USB /CAN	yes /yes /yes					
Warranty: 5 years / 10 years	yes /opt					
Certificates and approvals	CE, IEC62109, G98/G99, NI_G98/G99, EN50538, VDE0126-1-1, AS4777, CEI 0-21, VDE-AR-N4105, UTE C 15-712, EN50549, IEC 61727, IEC 62116, IEC 62040 ,C10/11,NRS 097-2-1					

Note:
1.*1 Continuous charging current: if there is PV and the PV power is strong enough, the maximum continuous charging power can reach 4000W; If there is no PV, and only AC is connected, the maximum continuous charging power is 3000W.
2. The SPH can only operate when the PV input is 120V with its power greater than 120W. Otherwise, it will only light up the display.

11.2 DC input terminal parameter

MC4 specification:

	2.5mm²/ 14AWG	4mm²/1 2 AWG	6mm²/ 10 AWG	10mm²/ 8AWG
DC connection	MC4	MC4	Mc4	MC4
Rated current (90℃ environment)	32A	40A	44A	65A
Nominal system voltage	600V DC(UL) 600V DC(TUV)			
Contact resistance	0.25mΩ（model）			
Protection grade	IP68			
Socket contact materials	Copper, tin			
Insulation materials	Thermoplastics UL94 V-0			
Ambient temperature range	-40℃ to +90℃			
Wire stripping length	7.0mm 9/32”			
Cable casing diameter	4.5 to 7.8mm(3/16” to 5/16”)			

11.3 Torque

Upper cover screws	1.3Nm(10.8 lbf·in)
Dc connector	1.8Nm(16.0 lbf·in)
M6 screwdriver	2Nm(18 lbf·in)
Grounding screw	2Nm(18 lbf·in)

11.4 Accessories (optional)

The following table lists the optional accessories for the SPH Inverter. If you need to purchase any of them, you can contact or your dealer. The P/N is for reference only and it is subject to change without notice.

Product name	Description	P/N
ShineLink-X	Used for data logging in EU	MR00.0011200
	Used for data logging in Australia	MR00.0011300
ShineWiFi-X	COM interface	MR00.0011000
SPM-CT-E (Sigle phase CT meter)	RS485 meter sensor[*1]	MR00.0019000
SPM-E(Single phase meter)	RS485 meter sensor[*2]	MR00.0008801
SPM-C(Single phase meter)	RS485 meter sensor[*3]	MR00.0010800
TPM(three phase meter)	RS485 meter sensor (standard)[*3]	MR00.0008300
	RS485 meter sensor (for Italy)	MR00.0008400
Shine4G-X	Used for data logging in EU	MR00.0019300

Note:

1. [*1] The corresponding meter address is 1.
2. [*2] The corresponding meter address is 3.
3. [*3] The corresponding meter address is 2.

12 Certificate of Compliance

confirms herewith that the products, when correctly configured, are in compliance with the requirements specified in the following standards and directives:

Model	Certificate
SPH 3000TL BL-UP SPH 3600 TL BL-UP	CE, IEC62109, G98, NI_G98, VDE0126-1-1, As4777, AS/NZS3100, CEI0-21, VDE-AR-N4105, En50438, VFR, MEA, PEA, IEC61727, IEC62116
SPH 4000 TL BL-UP SPH 4600 TL BL-UP SPH 5000 TL BL-UP SPH 6000 TL BL-UP	CE, IEC62109, G99, NI_G99, VDE0126-1-1, As4777, AS/NZS3100, CEI0-21, VDE-AR-N4105, En50438, VFR, IEC61727, IEC62116

Contact us 13

If you have technical problems concerning our products, please contact Service Line or your dealer. To provide you with the necessary support, please have the following information ready:

1. The serial number of the SPH inverter
2. The model information of the SPH inverter
3. The communication mode of the SPH inverter
4. The fault information of the SPH inverter
5. The information displayed on the screen of the SPH inverter
6. The manufacturer and model of the battery
7. The capacity and wiring mode of the battery

T
E
W

Download
Manual

T
E
W

GR-UM-180-A1-04