1. Introduction

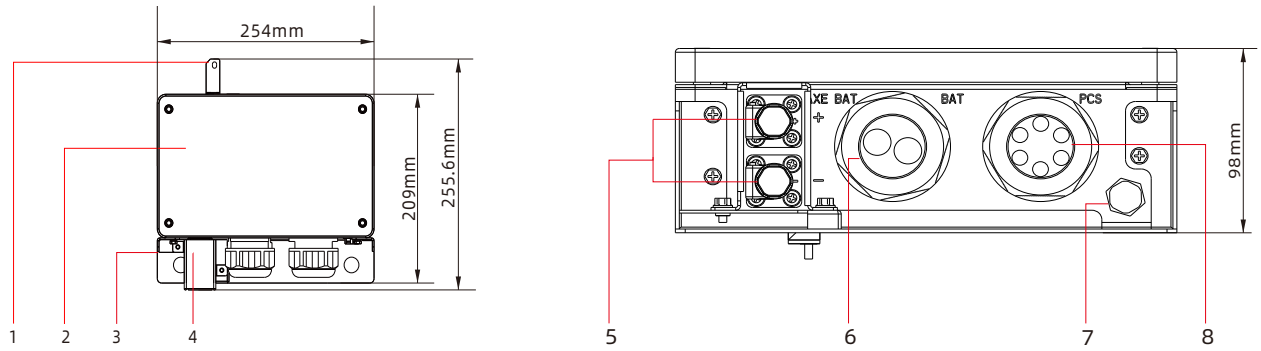

(1)Fixing bracket	(2)Cover plate	(3)Mounting bracket	(4)Protective cover	(5)AXE battery terminals
(6)Other battery terminals	(7)Vent valve	(8)PCS terminal		

⚠**Note**:
1.The dimensions of the battery terminal junction box are shown above, and the weight of the battery junction box is 2.5kg.
2. This document is intended for quick installation guidance of the battery terminal junction box. Please also refer to the User Manuals of the PCS and the battery.
3. shall not be held liable for any damage caused by improper installation.

2. Installation

2.1 System overview

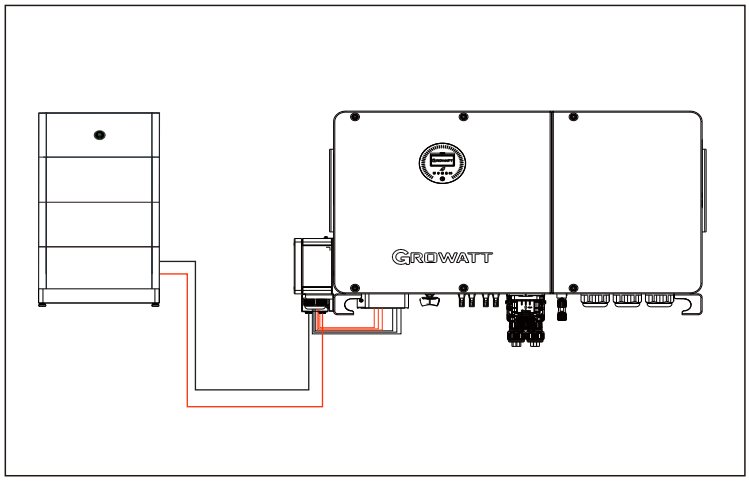

2.2 Installation tools

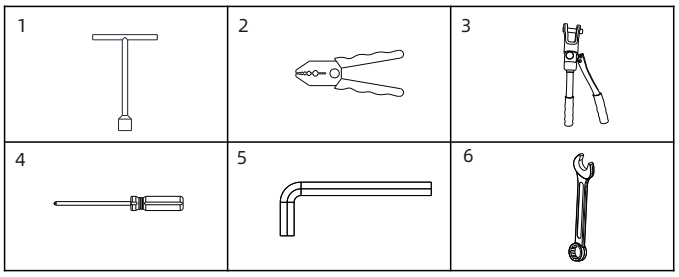

No.	Name	Specification	No.	Name	Specification
1	T-type socket wrench	18mm	2	Cable stripper	/
3	Crimping plier	/	4	Cross-head screwdriver	PH2*300
5	Hex socket wrench	5mm	6	Wrench	18mm

2.3 Accessories

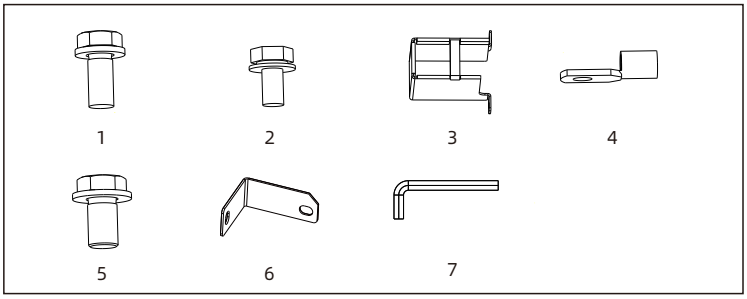

No.	Name	Qty	No.	Name	Qty
1	M12*25 bolt	2	5	M8*20 bolt	2
2	M4*8 Cross recessed hex head combination screw	4	6	Junction box fixing element	1
3	AXE battery terminal protective cover	1	7	Allen key	1
4	Crimping terminal (50mm²)	2	/	/	/

2.4 Installation procedure

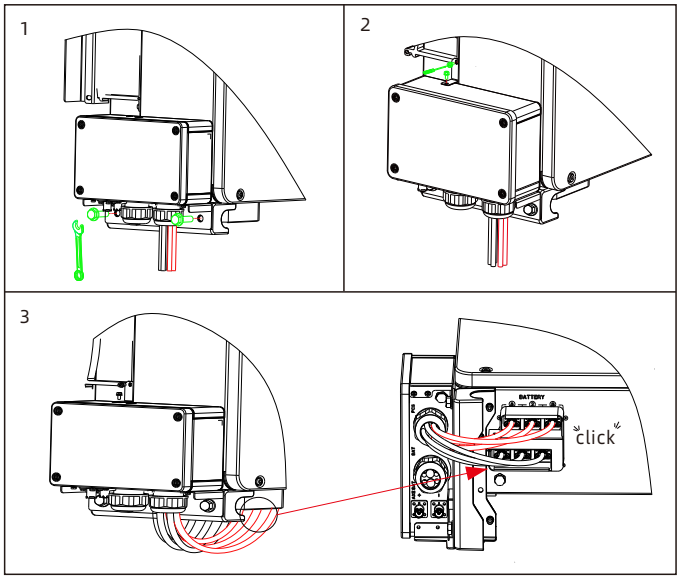

3. Cable connections

3.1 Prepare the cables

Prepare the following cables based on the battery type before cable connections.

No.	Battery type	Cable type	Specification	Note
1	AXE battery	Orange/black single-core copper wire	25 mm²	Delivered with the AXE battery package
2	Other batteries	Orange/black single-core copper wire	50 mm²	Prepared by users

⚠**Note**:
1. For personal safety, do not operate with electricity.
2. It is recommended that the cable prepared by yourself not longer than 10 m.
3. It is not allowed to connect the AXE battery and other batteries at the same time.
4.Be sure to install the battery terminal protective cover.

3.2 Connect the AXE battery cables

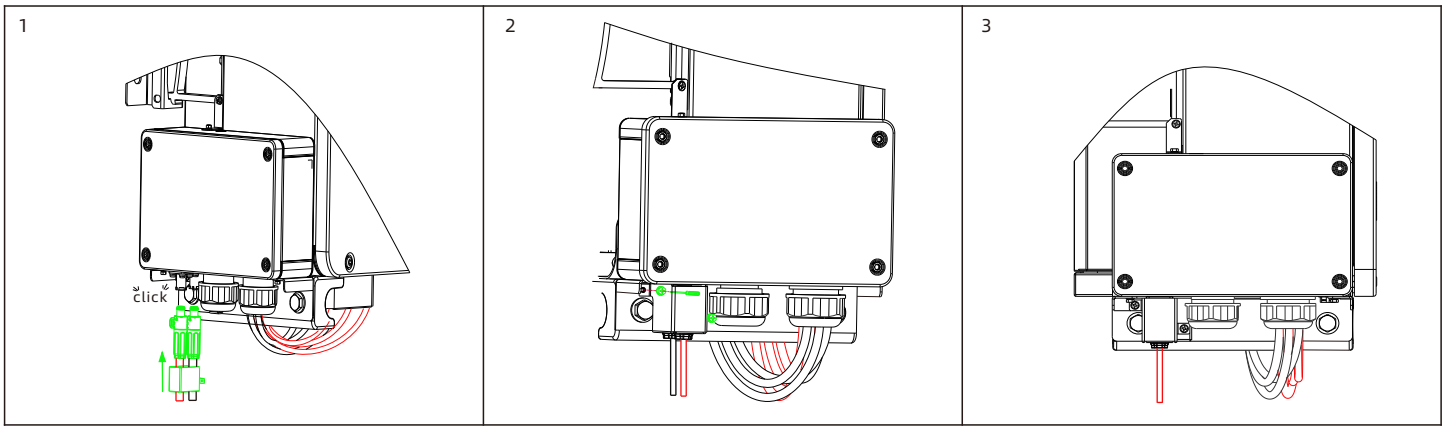

3.3 Connect other battery cables

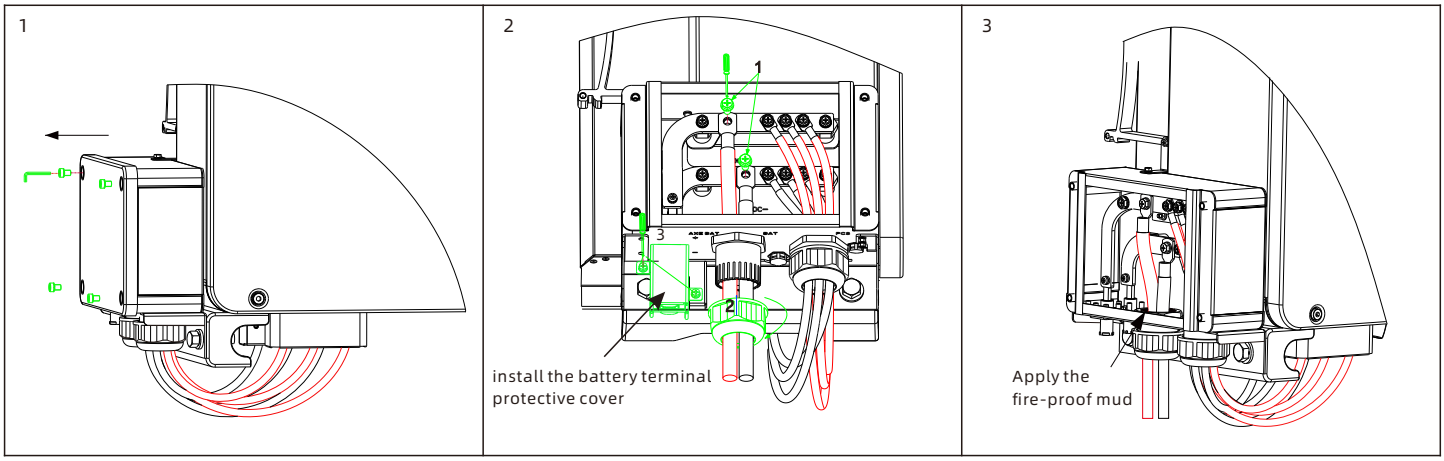

4. Service and contact

E
W

Download Manual